Sauna BARREL 300 model
Assembly instructions
(Wood-burning stove)

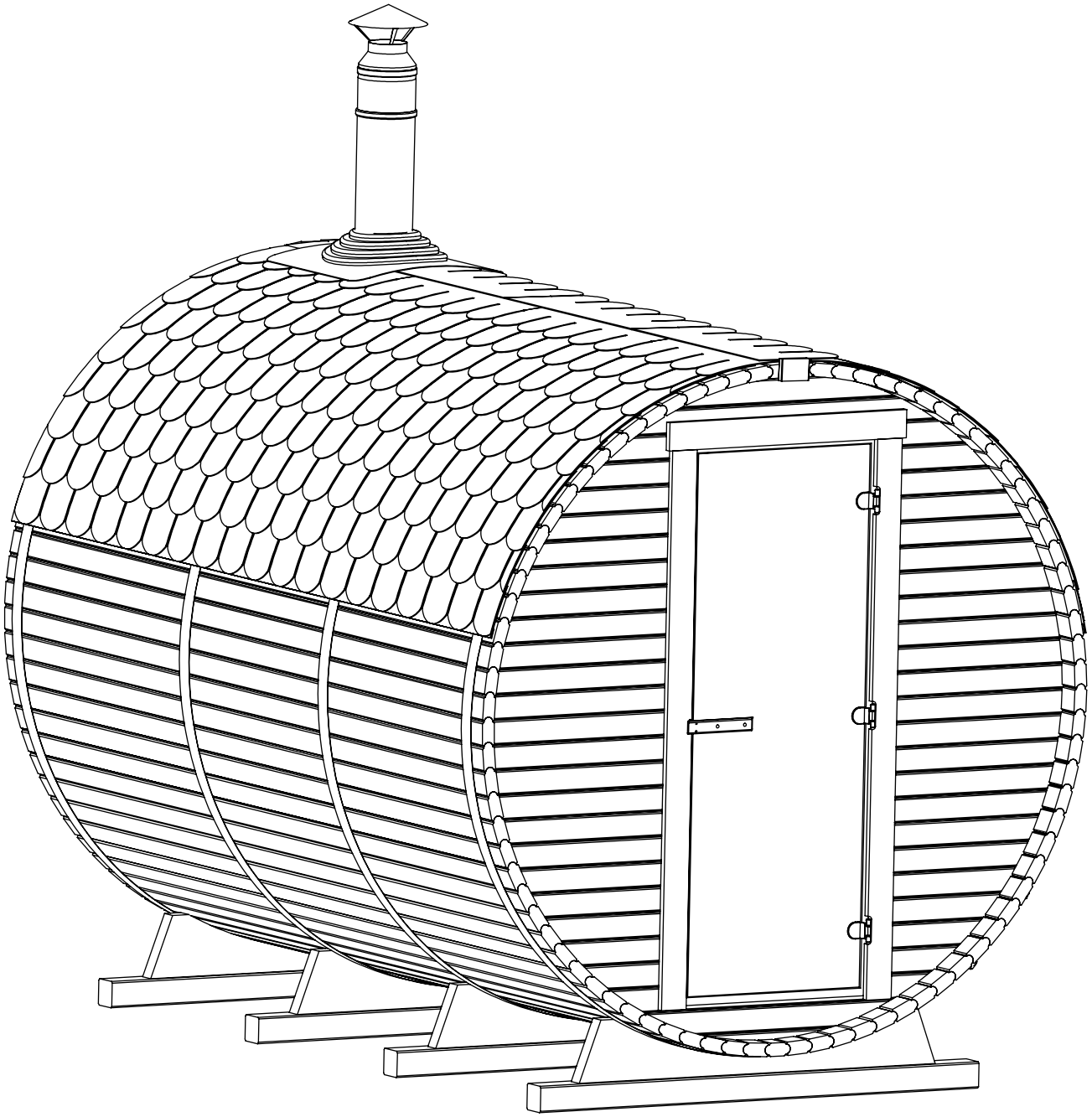

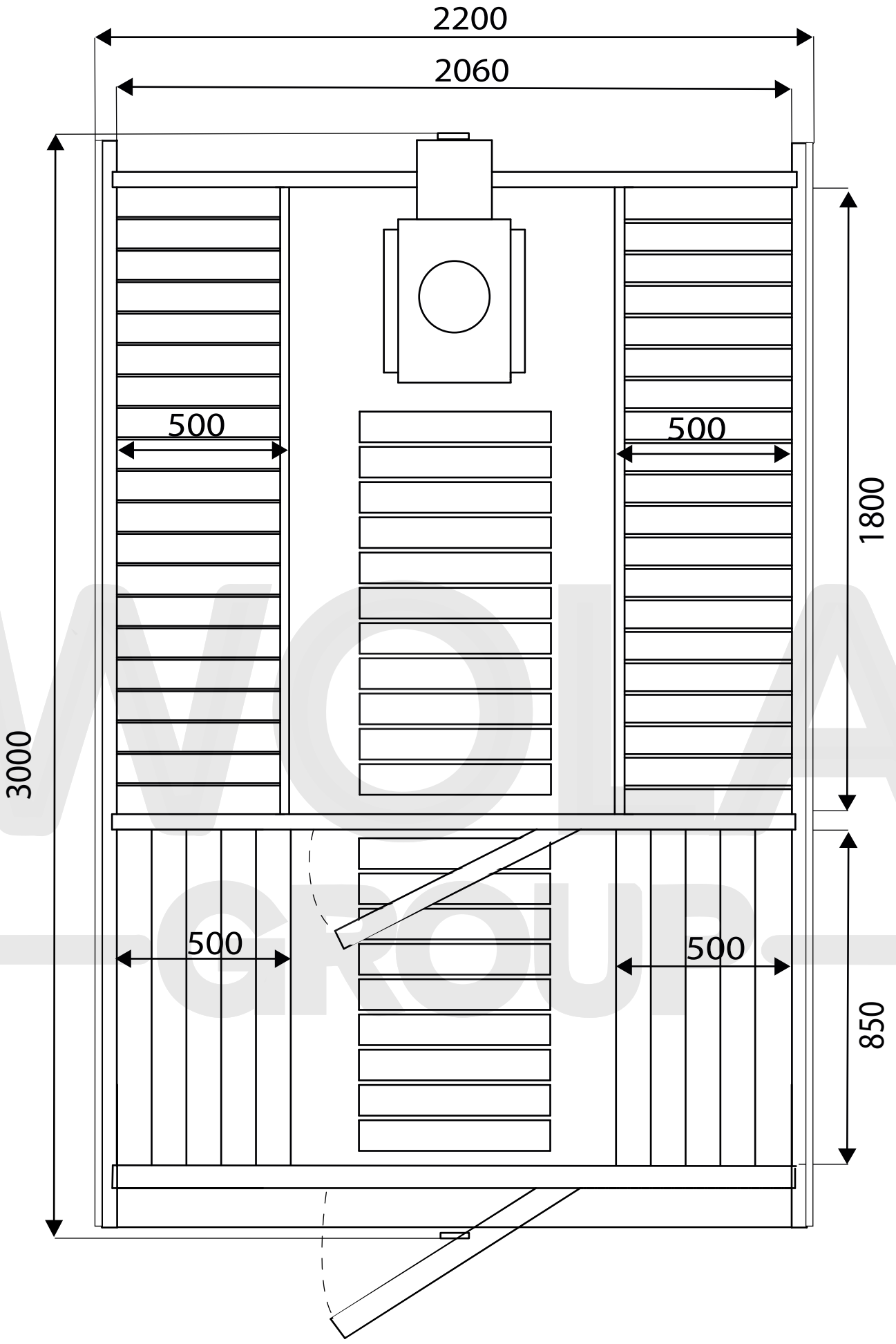
2200
2060
500
500
1800
3000
500
500
850

necessary tools

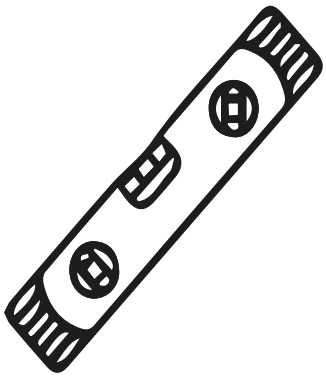

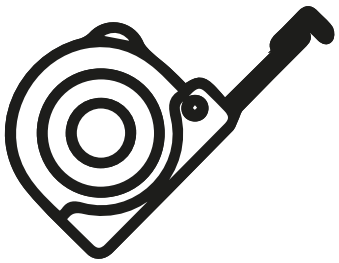

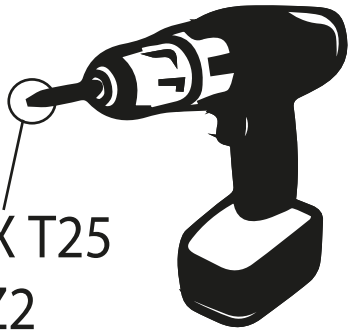

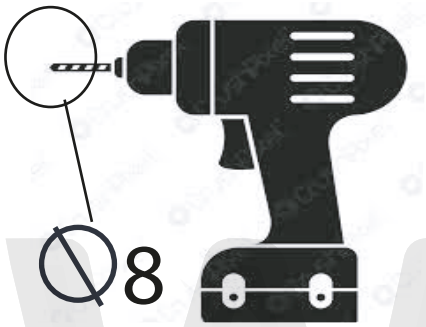







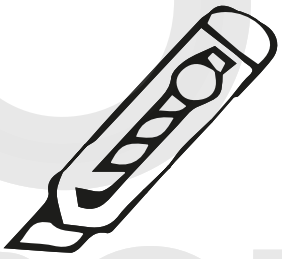





+



impregnation



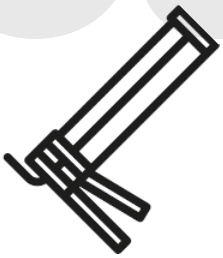

+

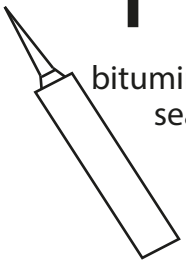



impregnating oil
for benches

NOT INCLUDED!

WOLA GROUP

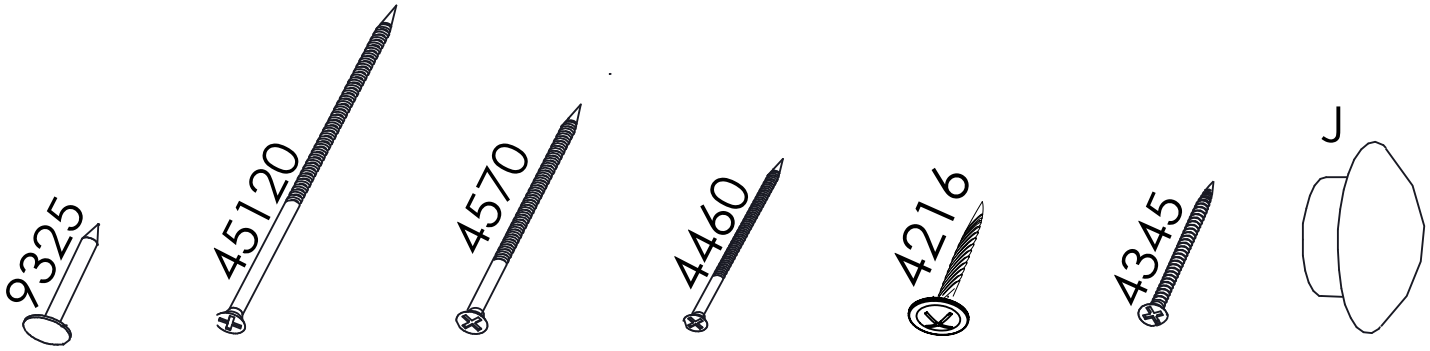

805x 500x 340x 120x 60x 70x 16x

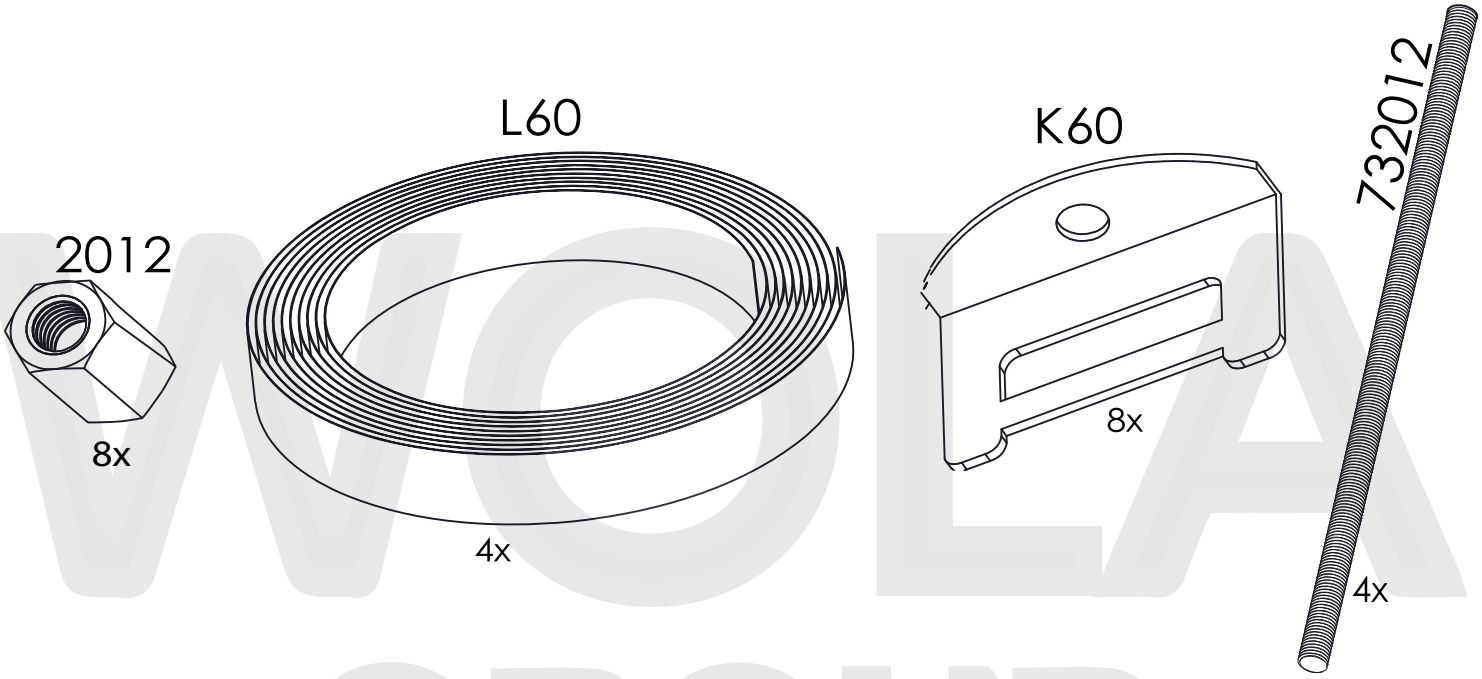

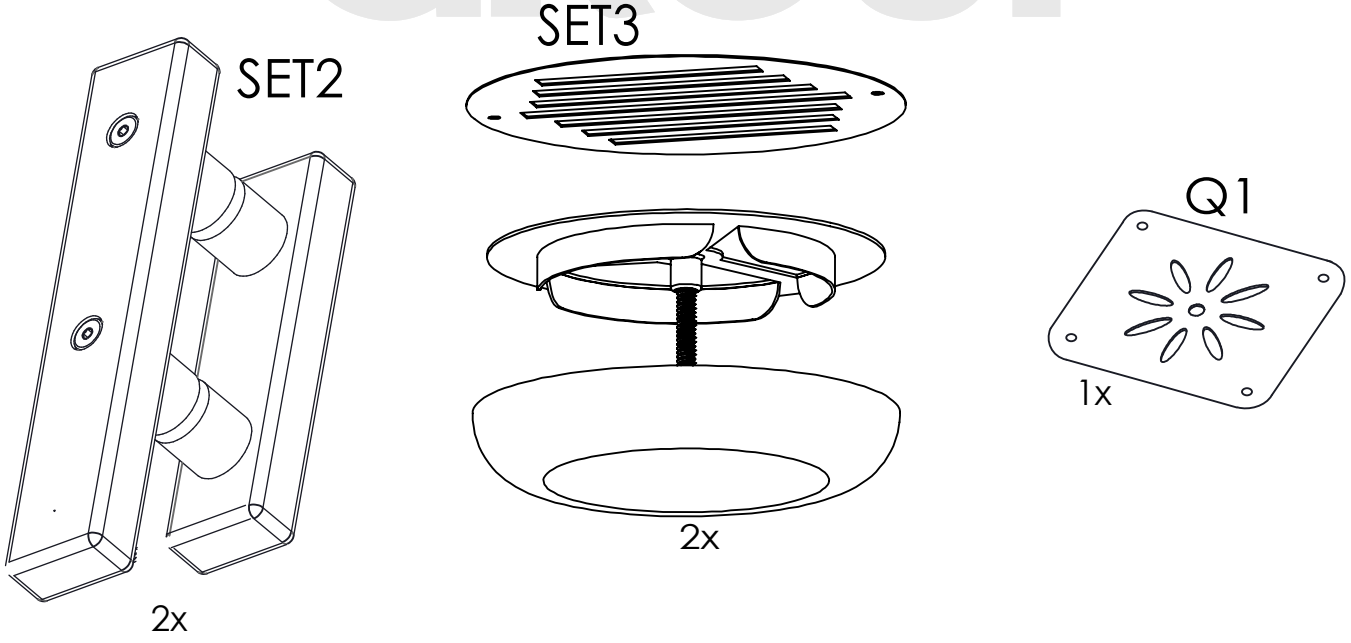

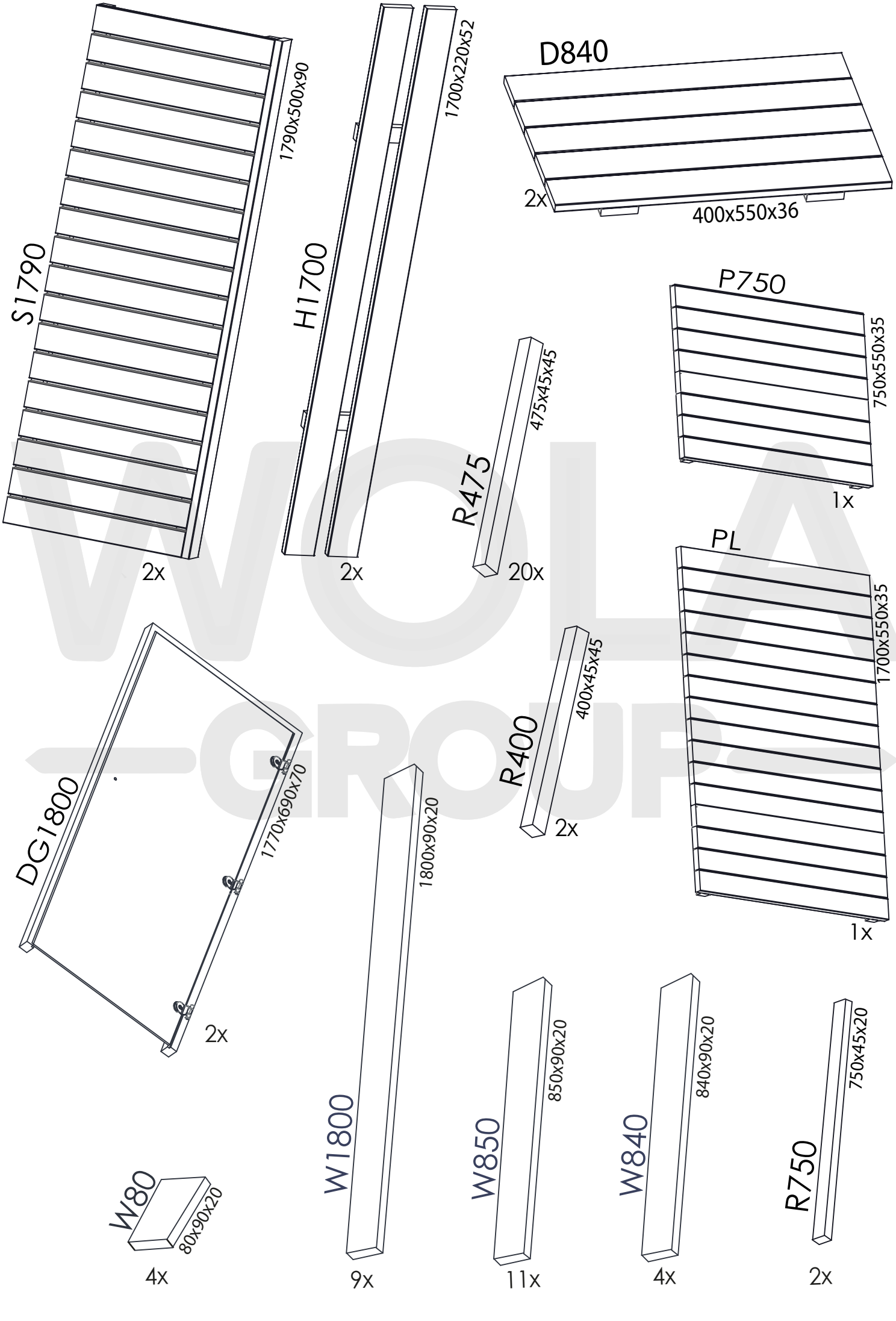
S1790
1790x500x90
2x
H1700
1700x220x52
2x
D840
400x550x36
2x
P750
750x550x35
1x
R475
475x45x45
20x
PL
1700x550x35
1x
R400
400x45x45
2x
DG1800
1770x690x70
2x
W1800
1800x90x20
9x
W850
850x90x20
11x
W840
840x90x20
4x
R750
750x45x20
2x
W80
80x90x20
4x

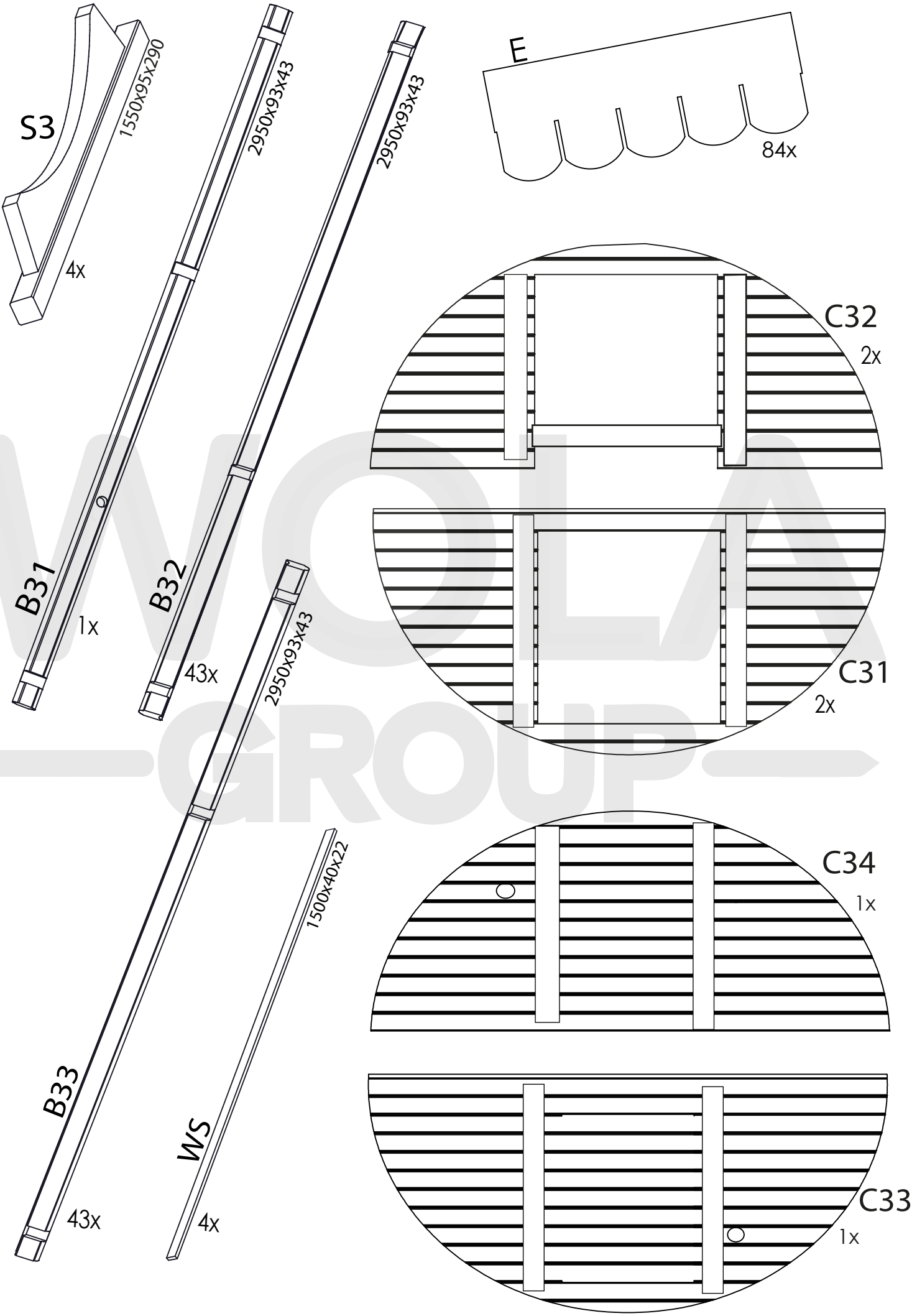
S3
1550x95x290
4x
B31
1x
2950x93x43
B32
43x
2950x93x43
E
84x
C32
2x
C31
2x
2950x93x43
B33
43x
1500x40x22
WS
4x
C34
1x
C33
1x

A PANORAMA INSTALATION SET (NOT INCLUDED)
PURCHASED SEPARATELY

for installation see **Appendix 2**

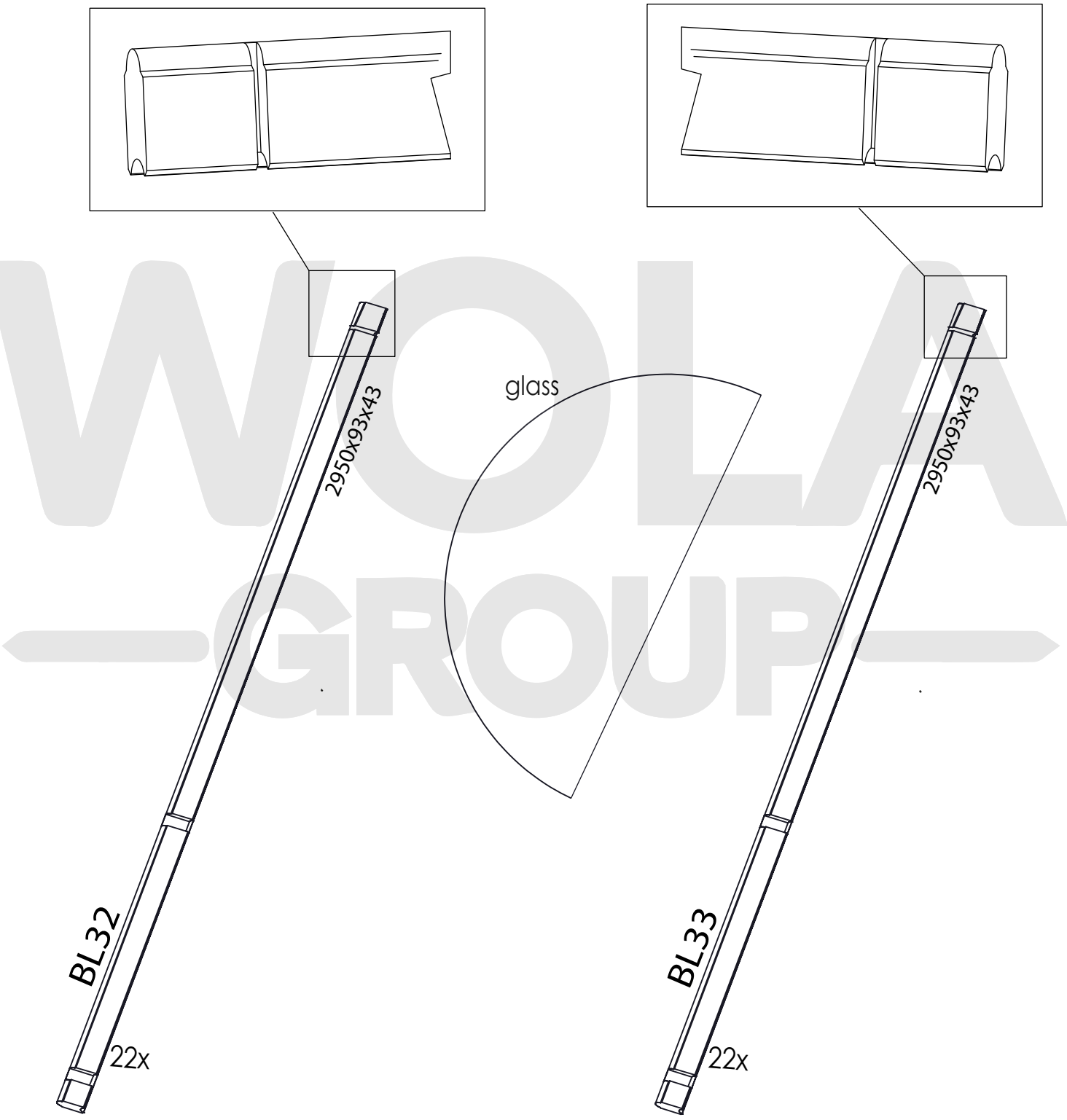

A STOVE INSTALATION SET (NOT INCLUDED)
PURCHASED SEPARATELY

for installation see **Appendix 3**

G12



1x

G7

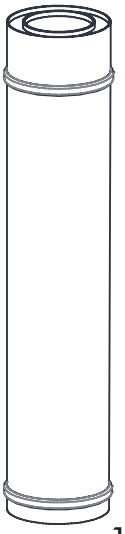

1x

G8

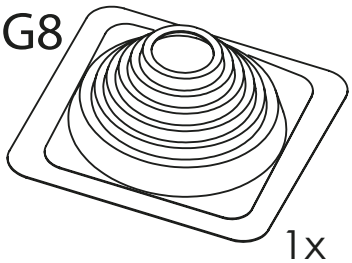

1x

G9



1x

G6

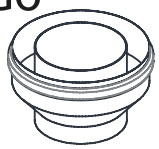

1x

Q2

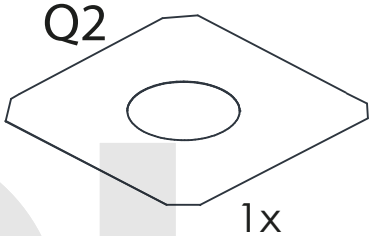

1x

Q5

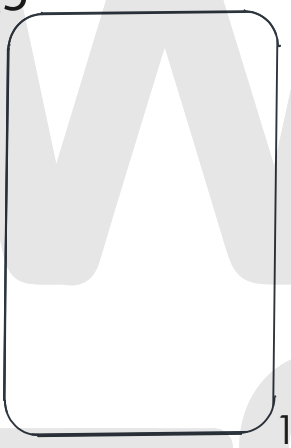

1x

Q4

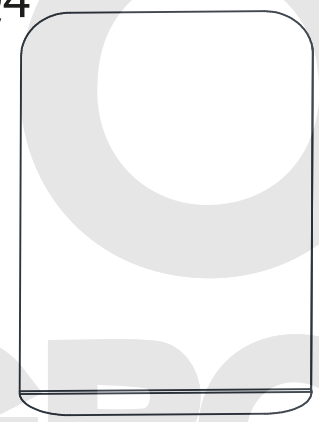

1x

ELECTRIC STOVE

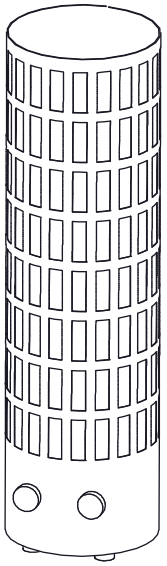

1x

G1

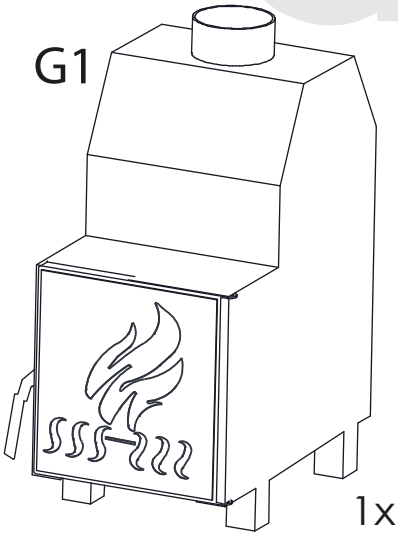

1x

G4

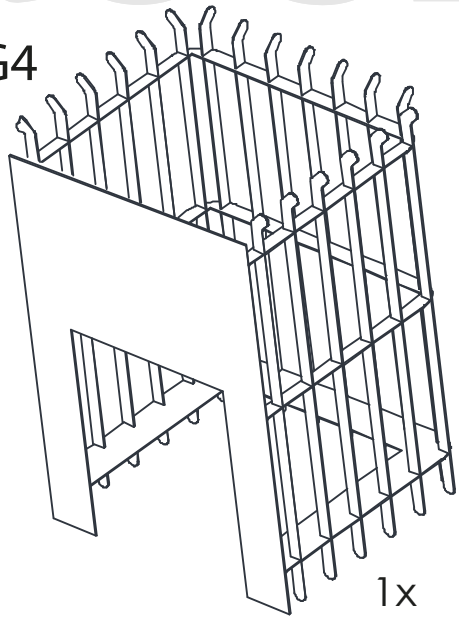

1x

G5

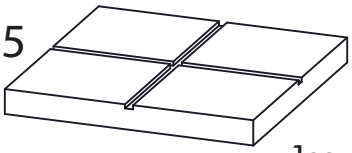

- for G1 only

1x

WOLA GROUP

S3 - 4

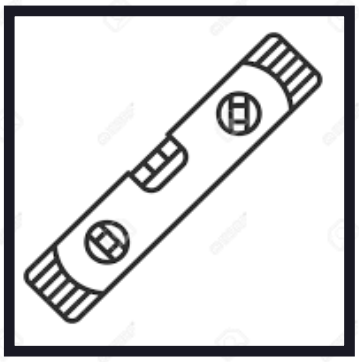



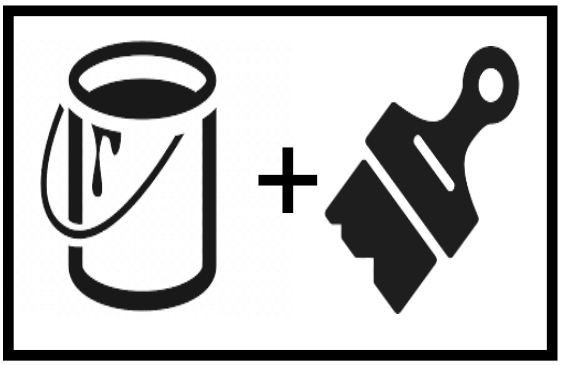

S3x4

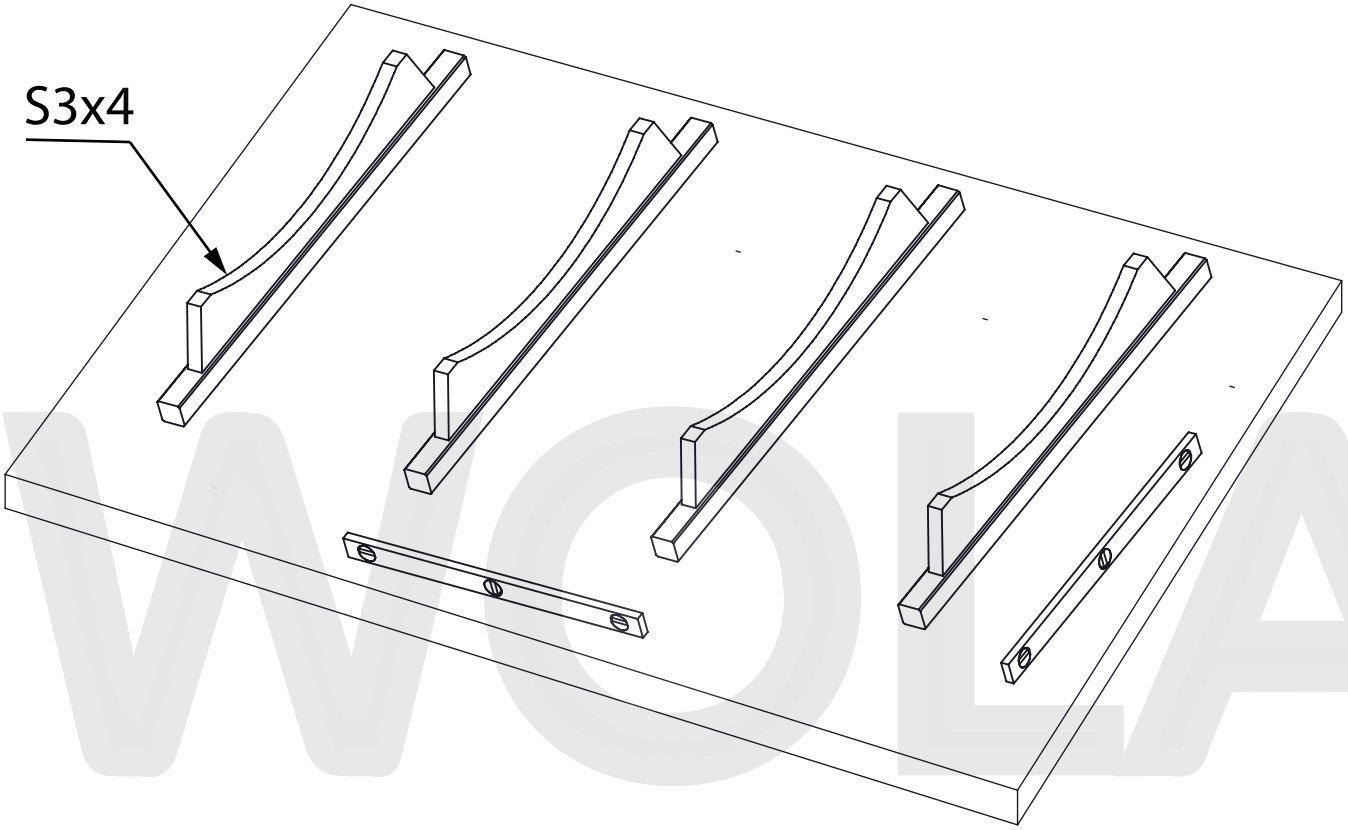

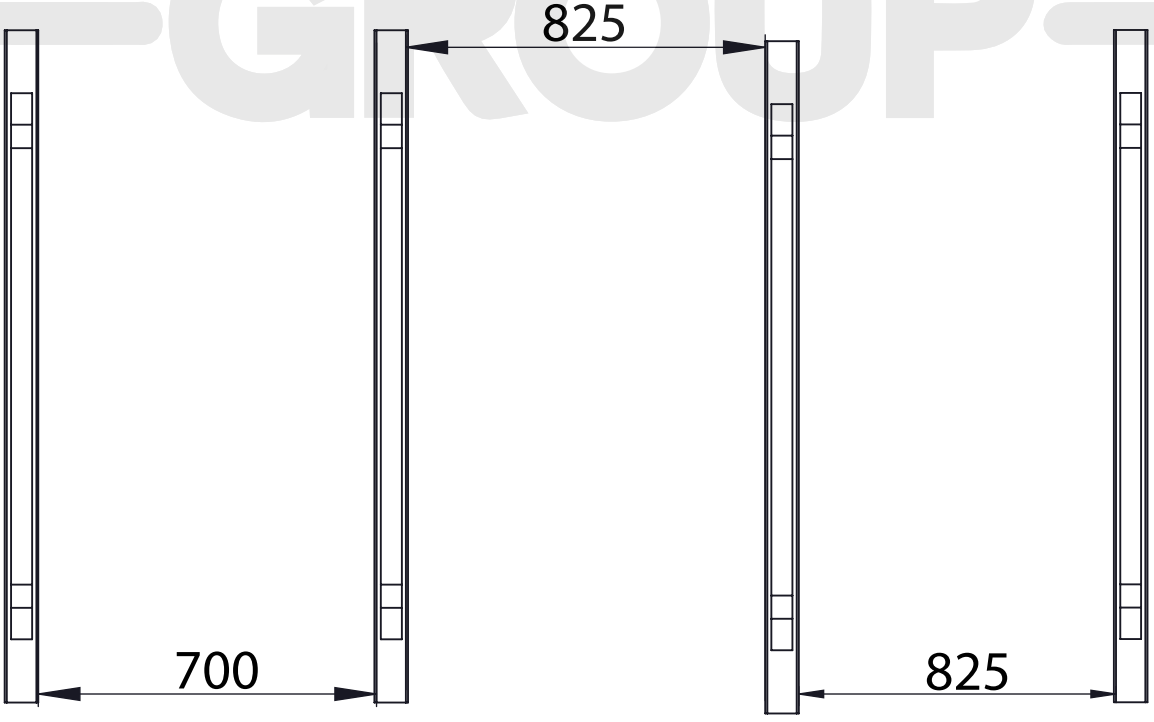

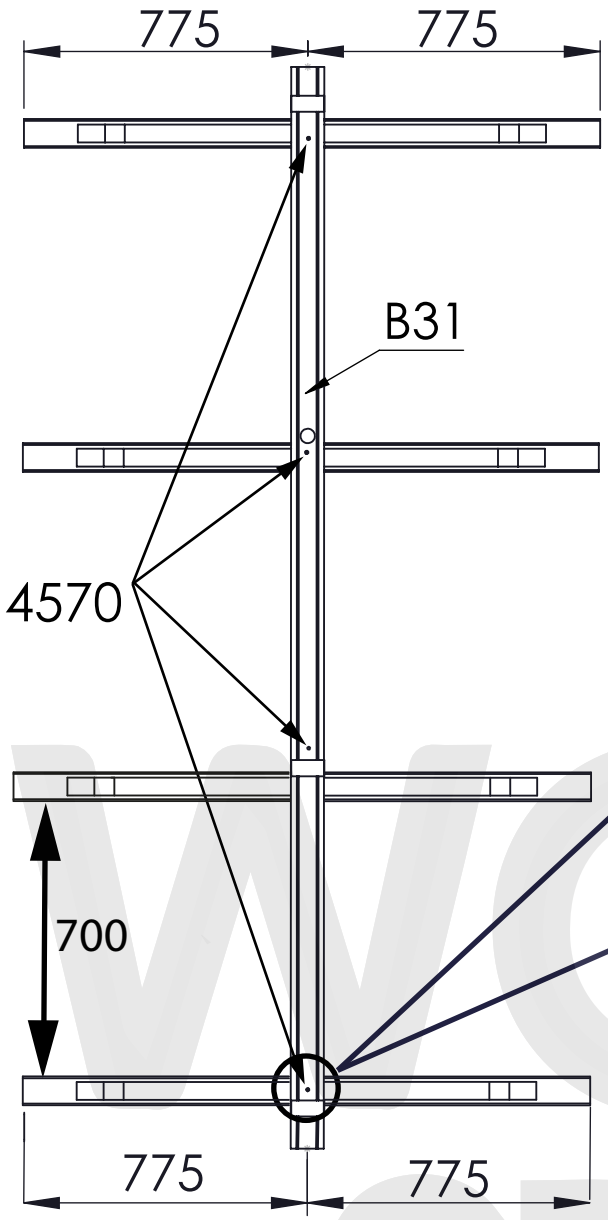

B31 - 1
B32 - 2
B33 - 2
4570 - 20
45120 - 16

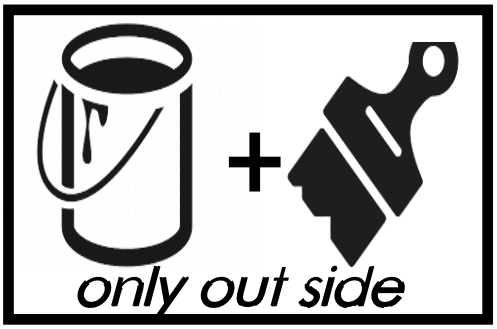

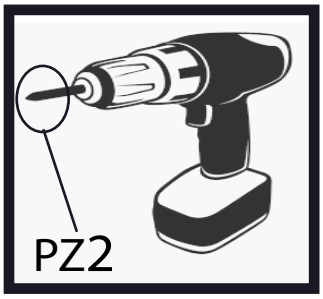



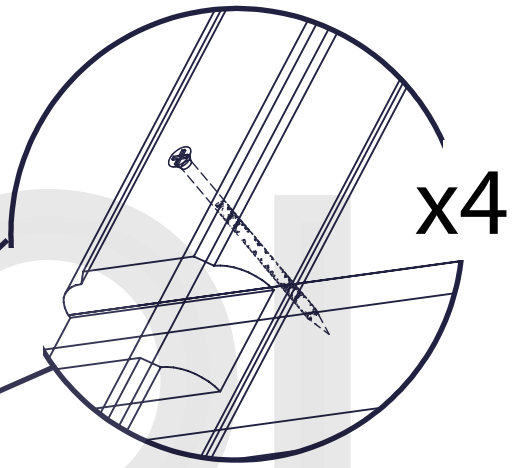

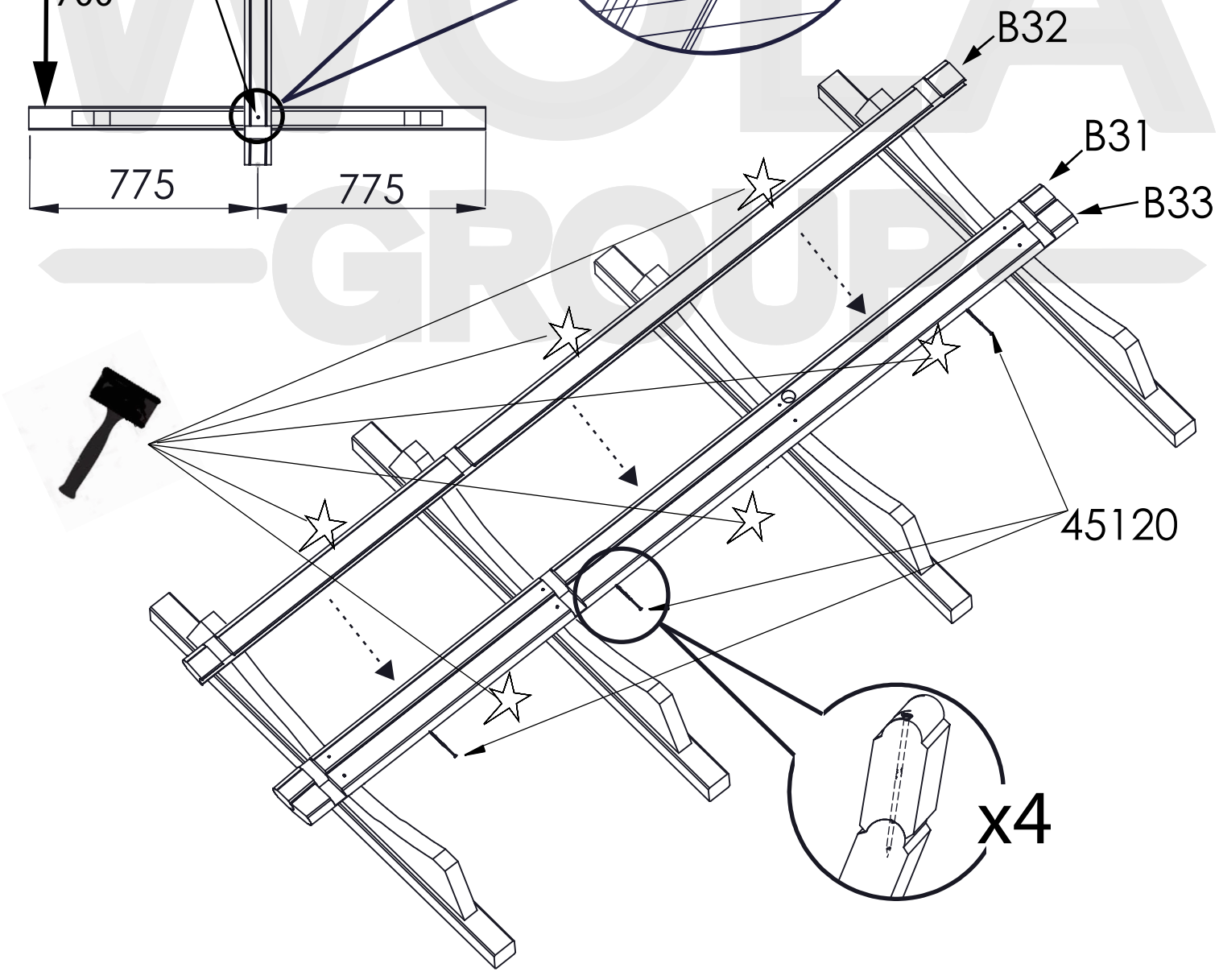

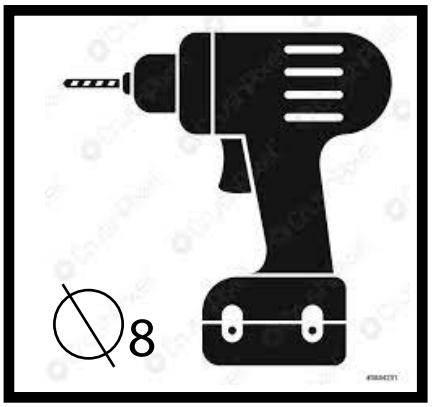

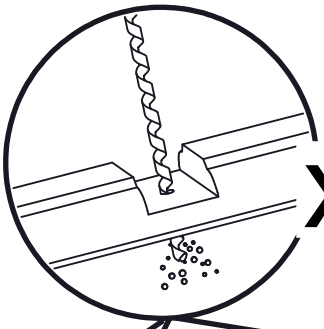

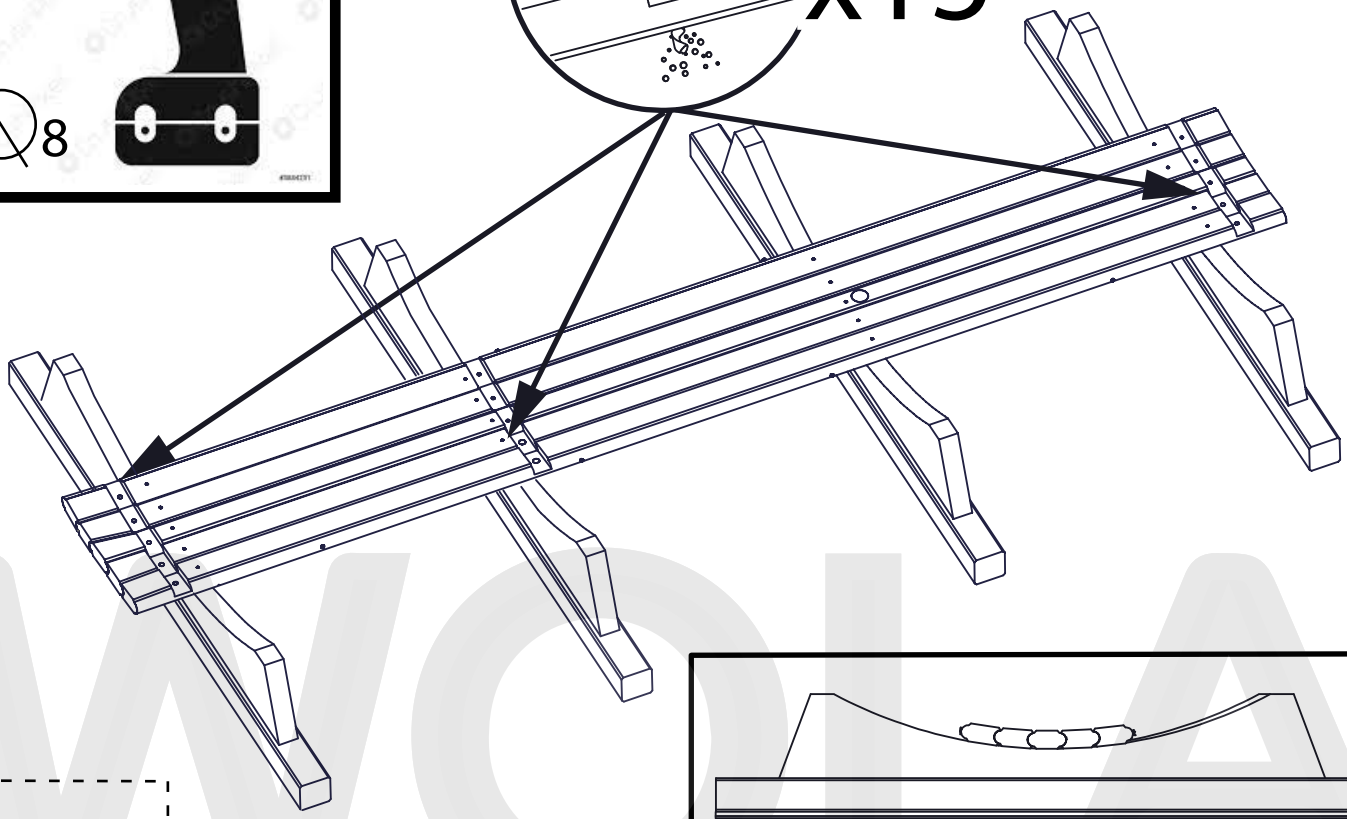

C31 - 2
C33 -1
B32 - 5
B33 - 5
4570 - 46
45120 - 40

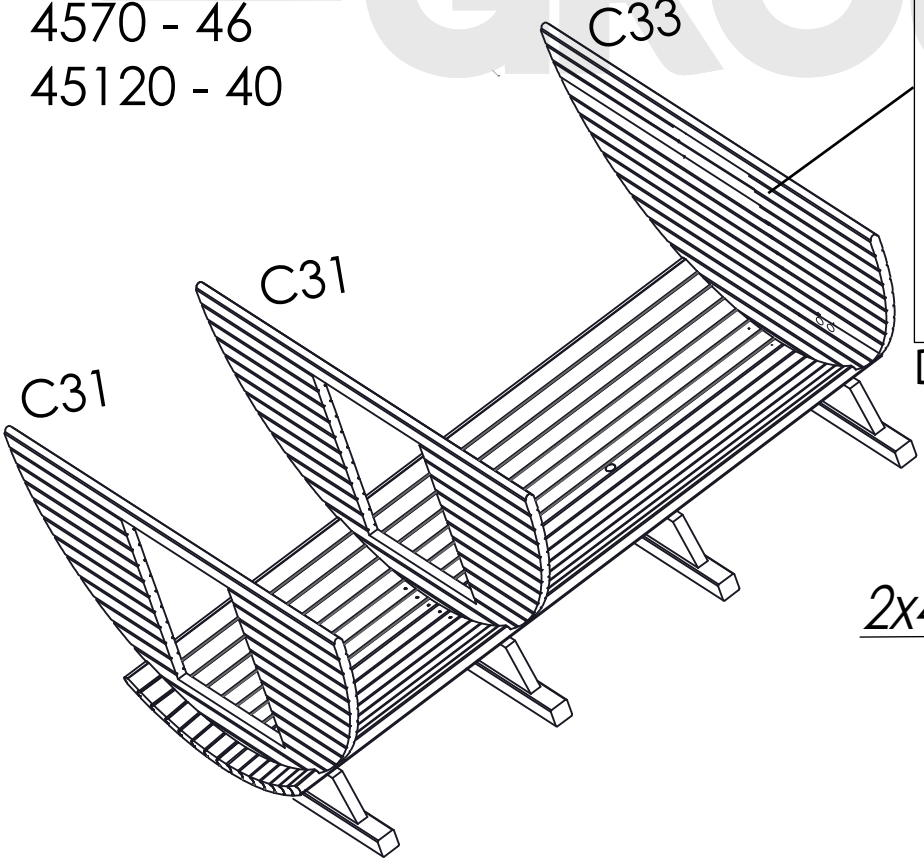

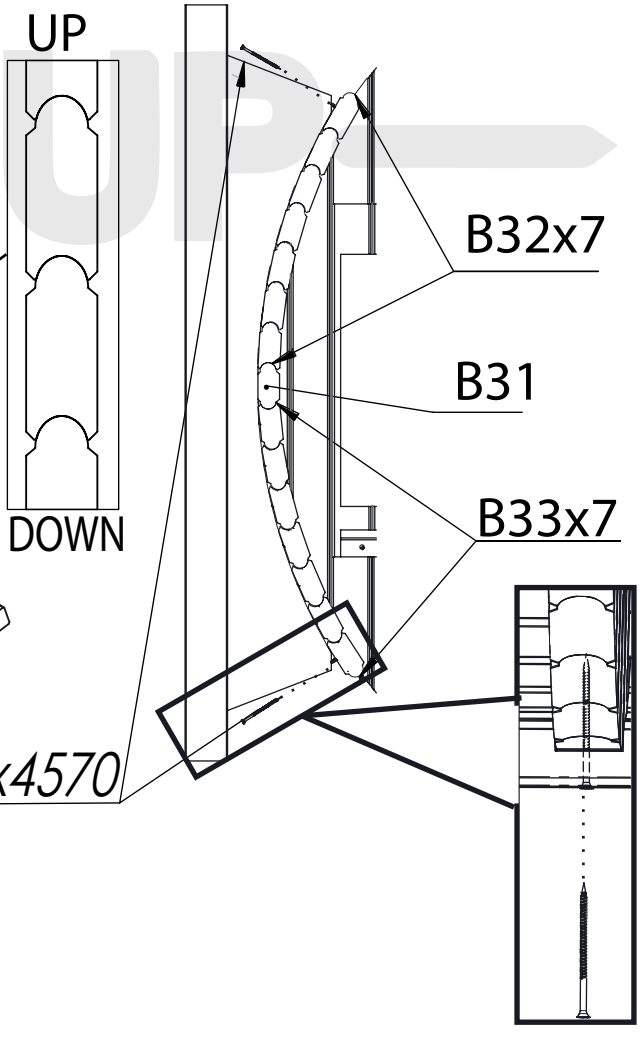

B32 - 14
B33 - 14
C32 - 2
C34 - 1
4570 - 90
45120 - 112

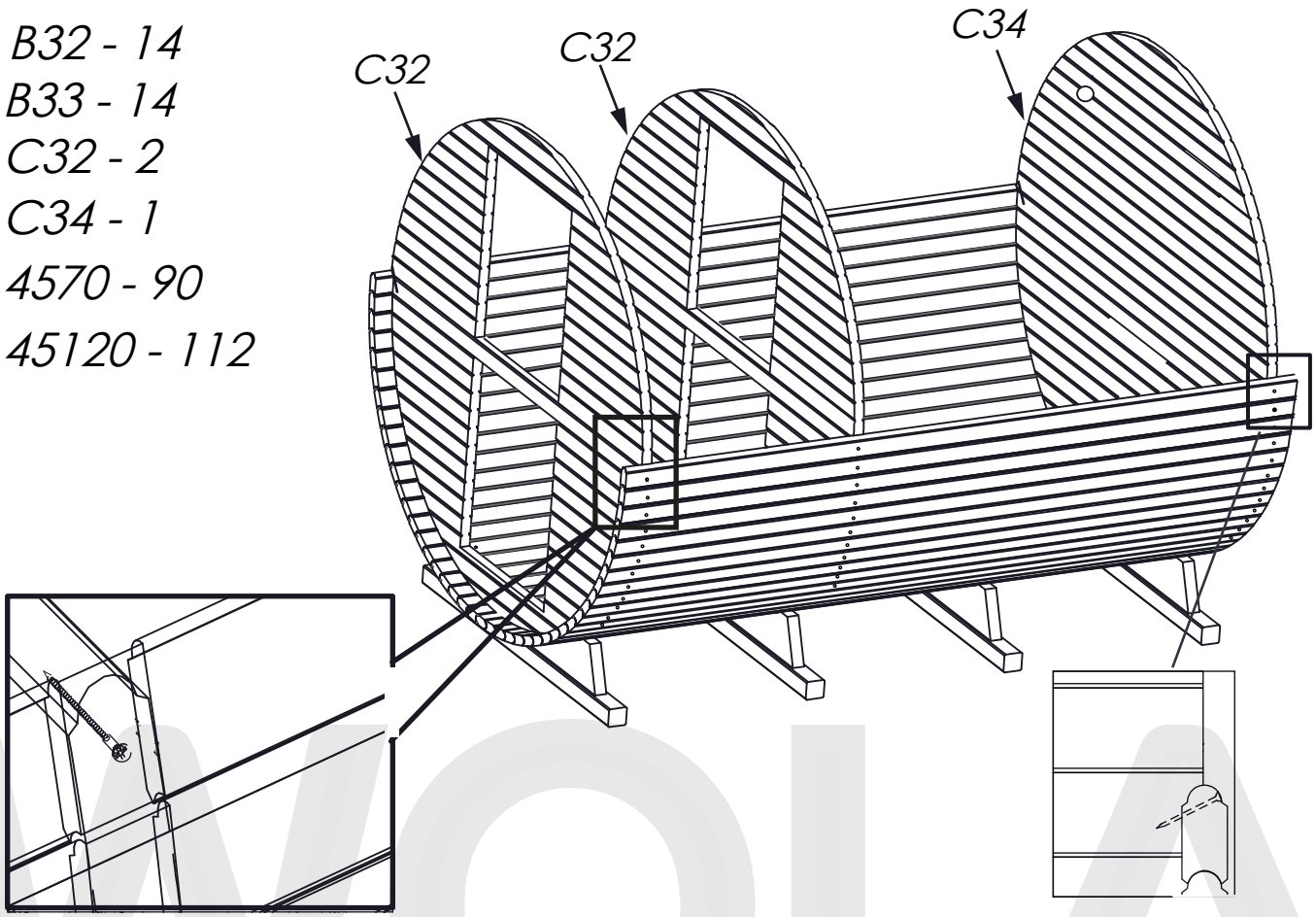

for panorama installing see **Appendix 2**

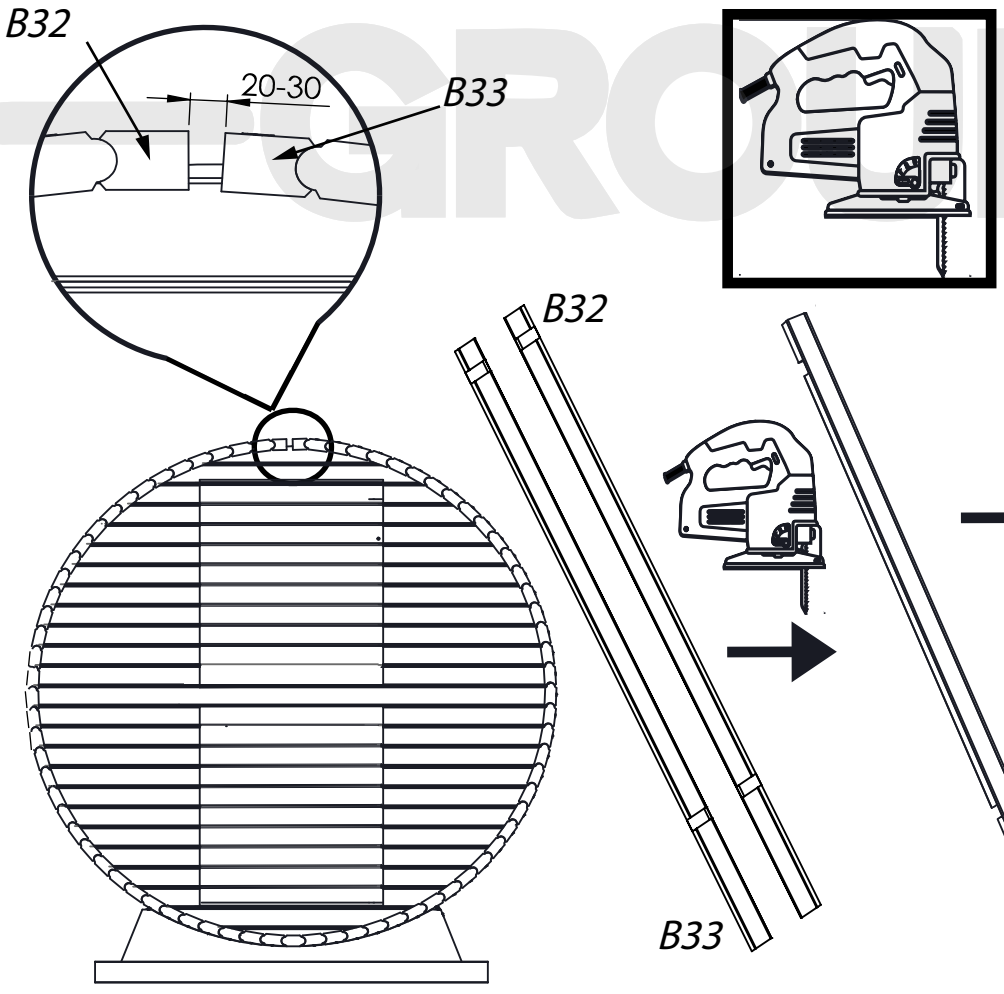

B32 - 20
B33 - 20
4570 - 120
45120 - 160

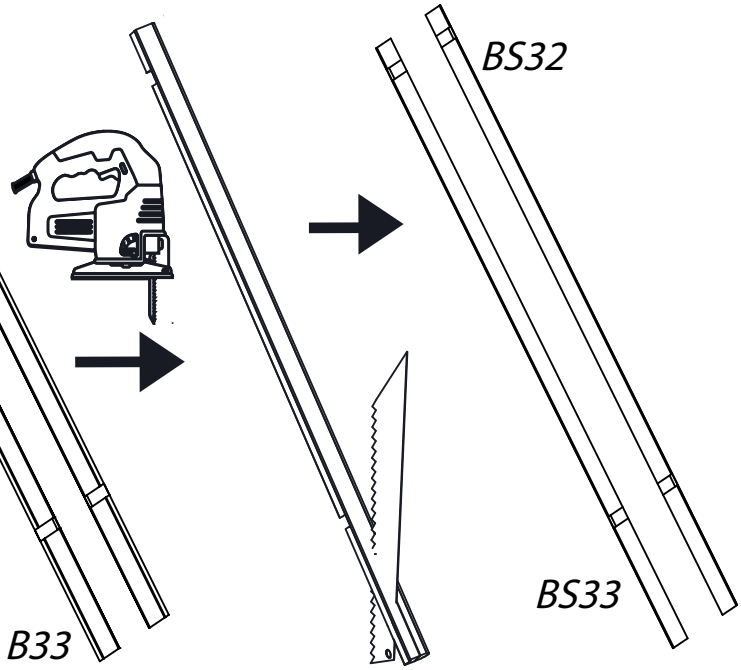

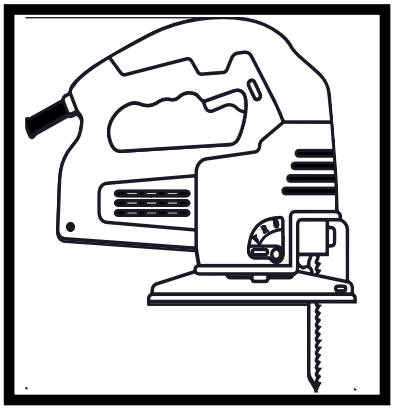

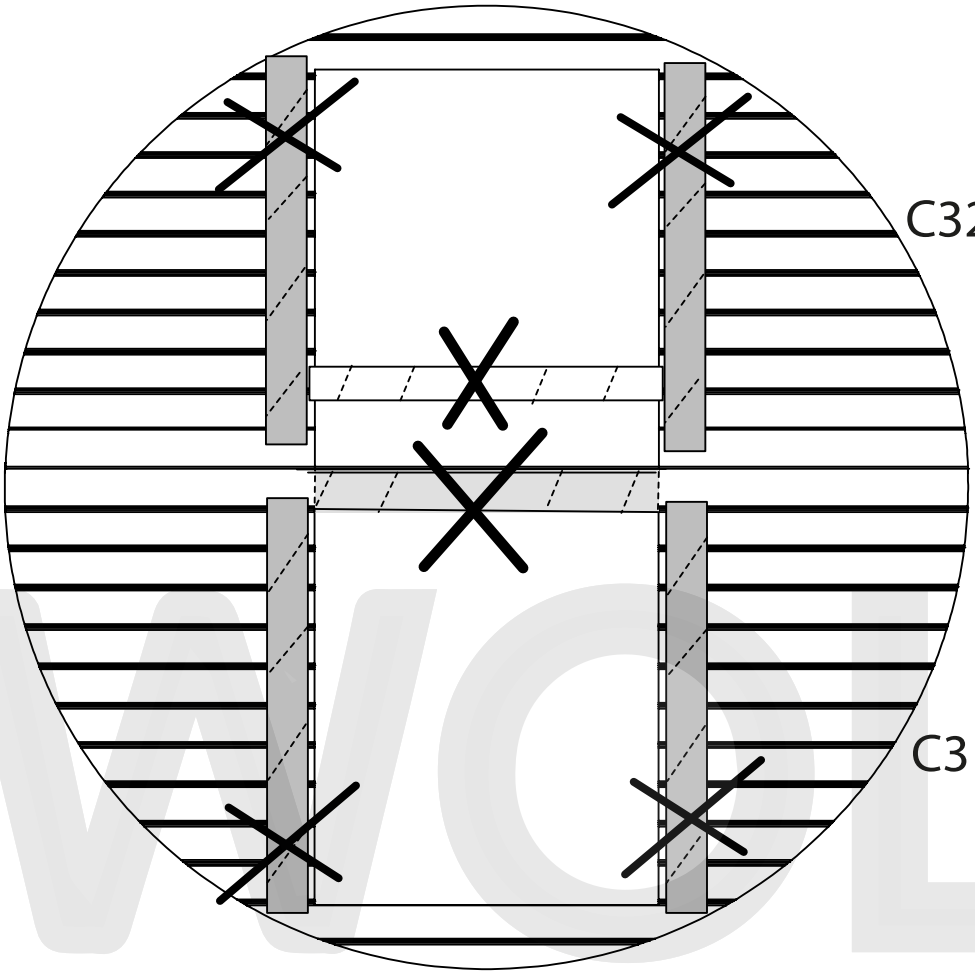

Q1 - 1
4345 - 4

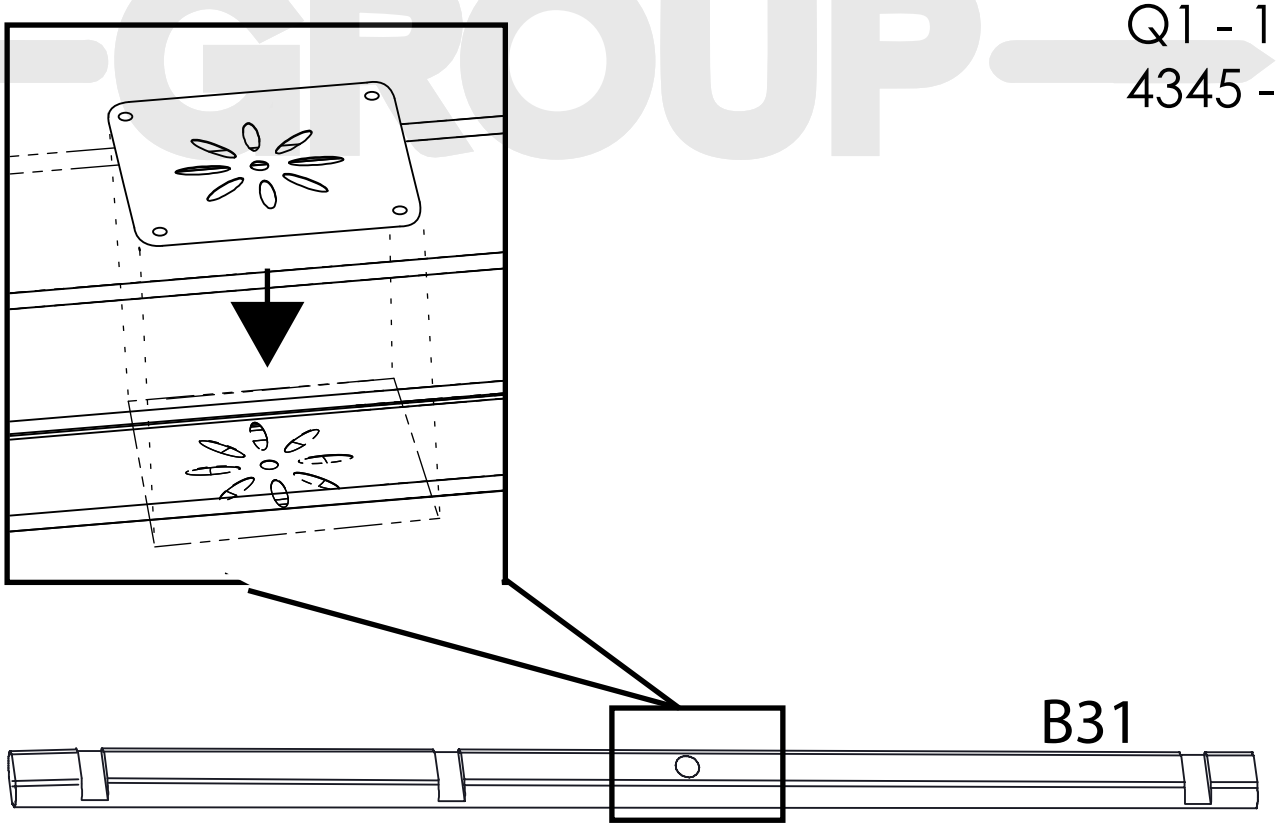

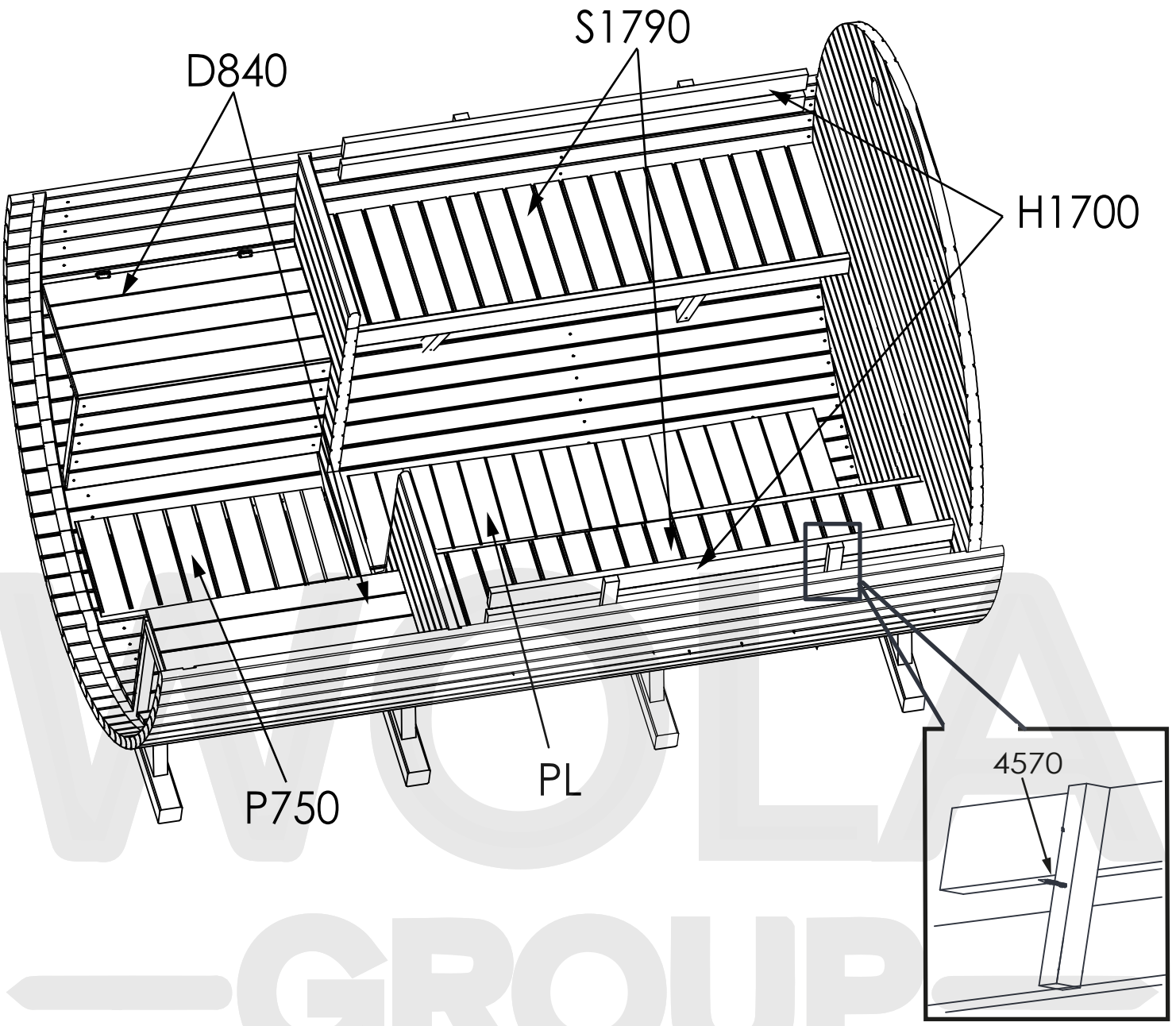
S1790
D840
H1700
P750
PL
4570

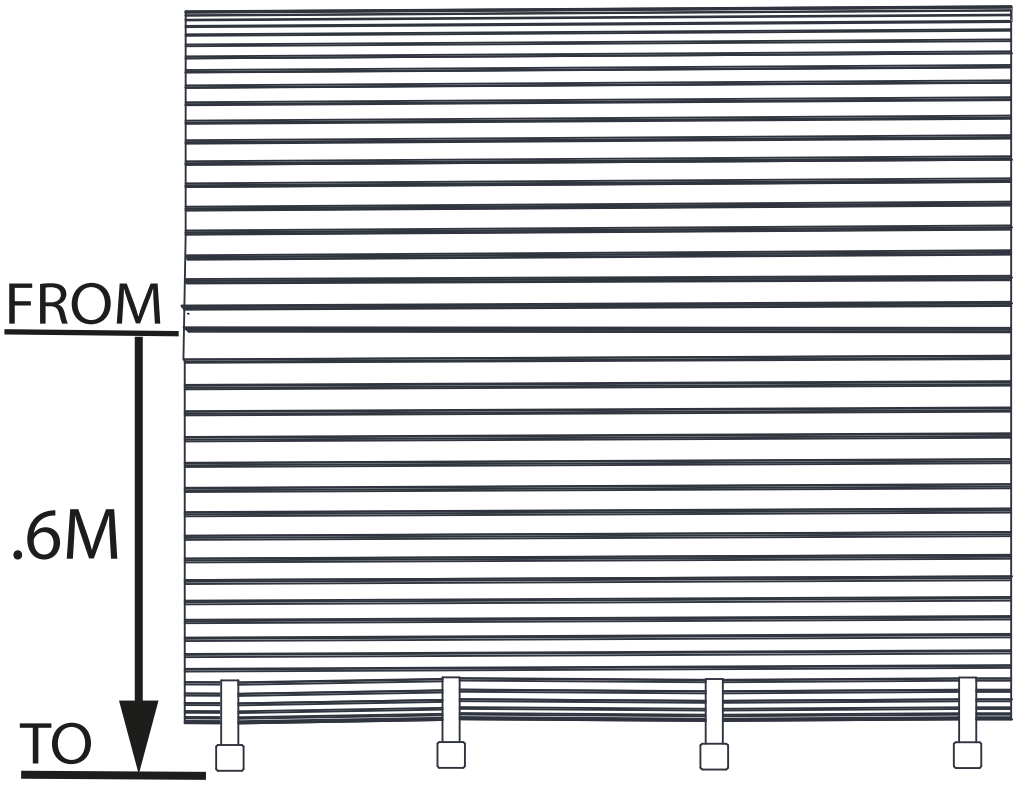
FROM
1.6M
TO

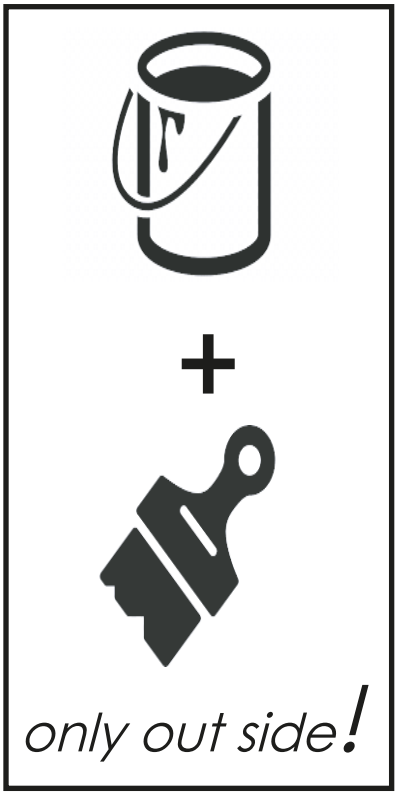
+
only out side!

H1700 - 2
S1790 - 2
R475 - 12
4570 - 36

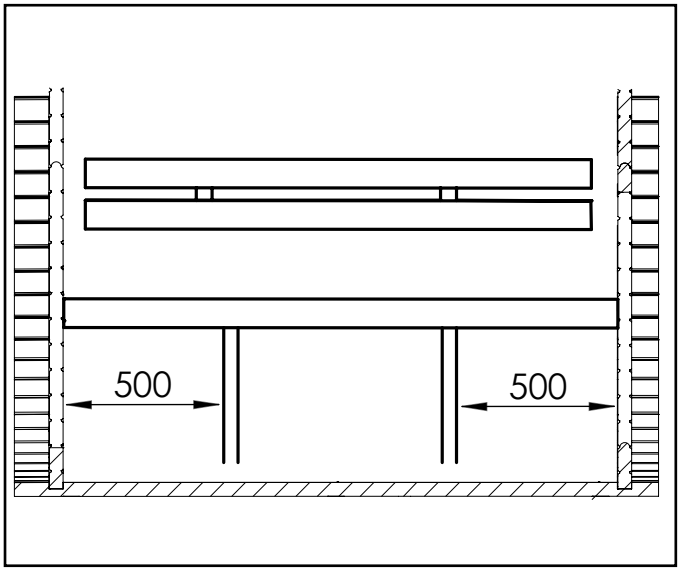

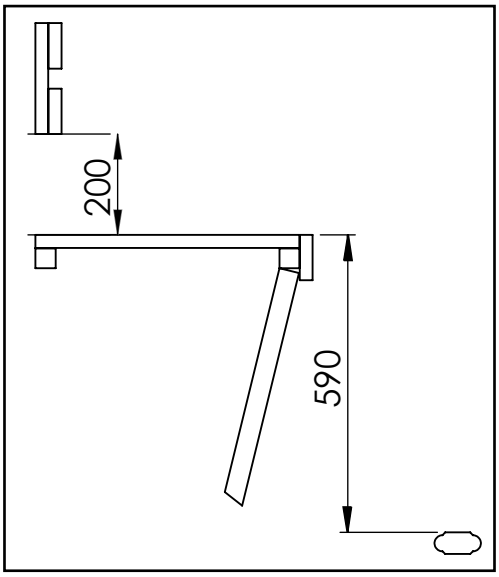

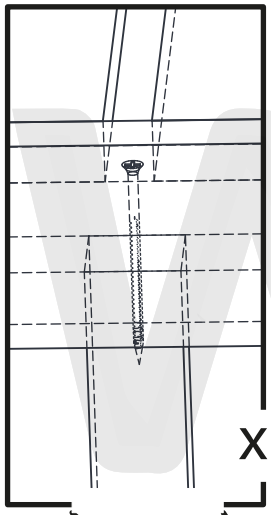

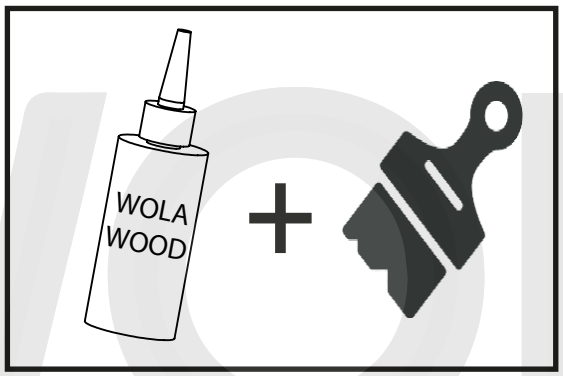

– for benches and back supports **only!**

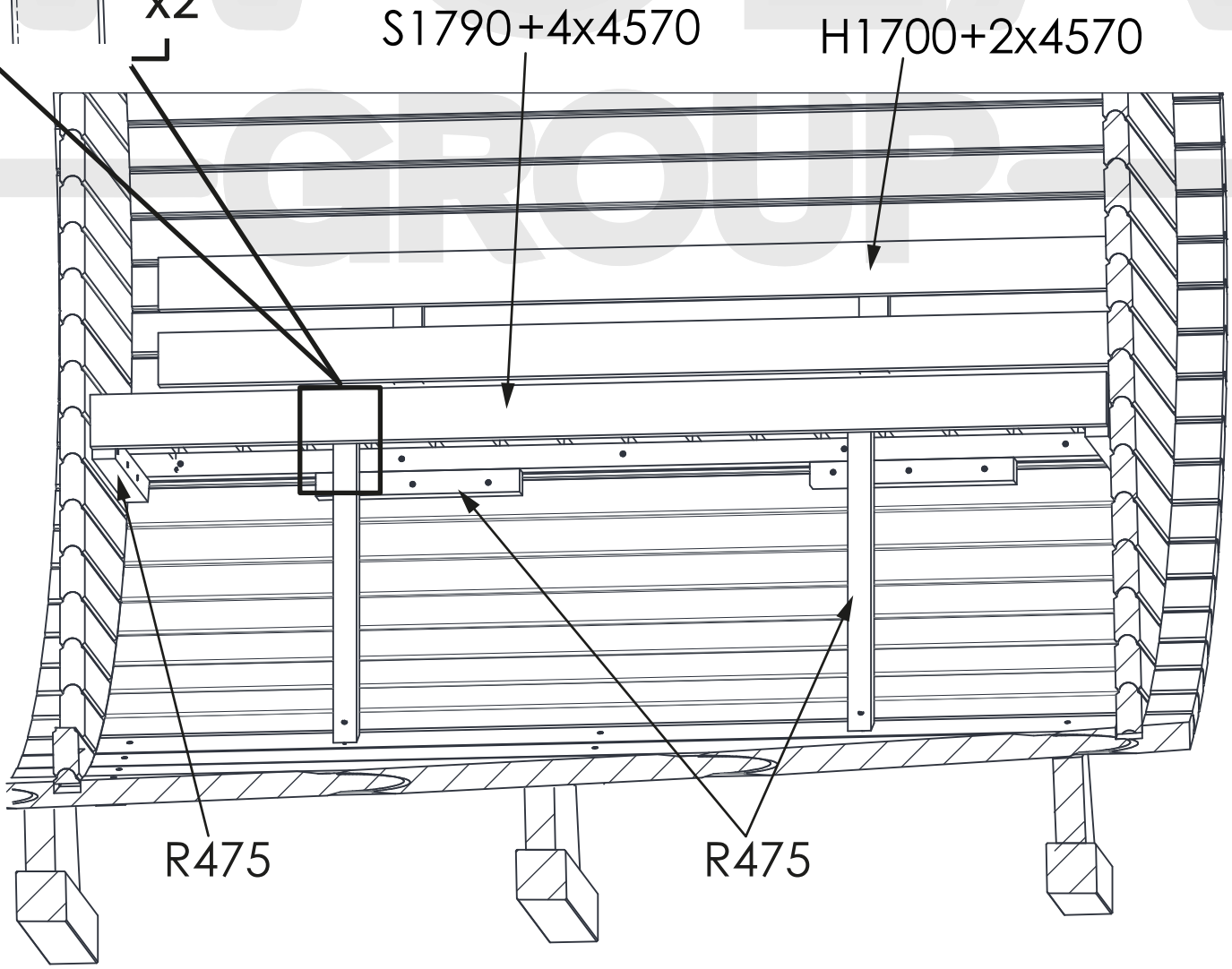

D840 - 2
R750 - 2
R475 - 8
W850 - 10
80401 - 4
4570 - 64
4460 - 8
4216 - 16

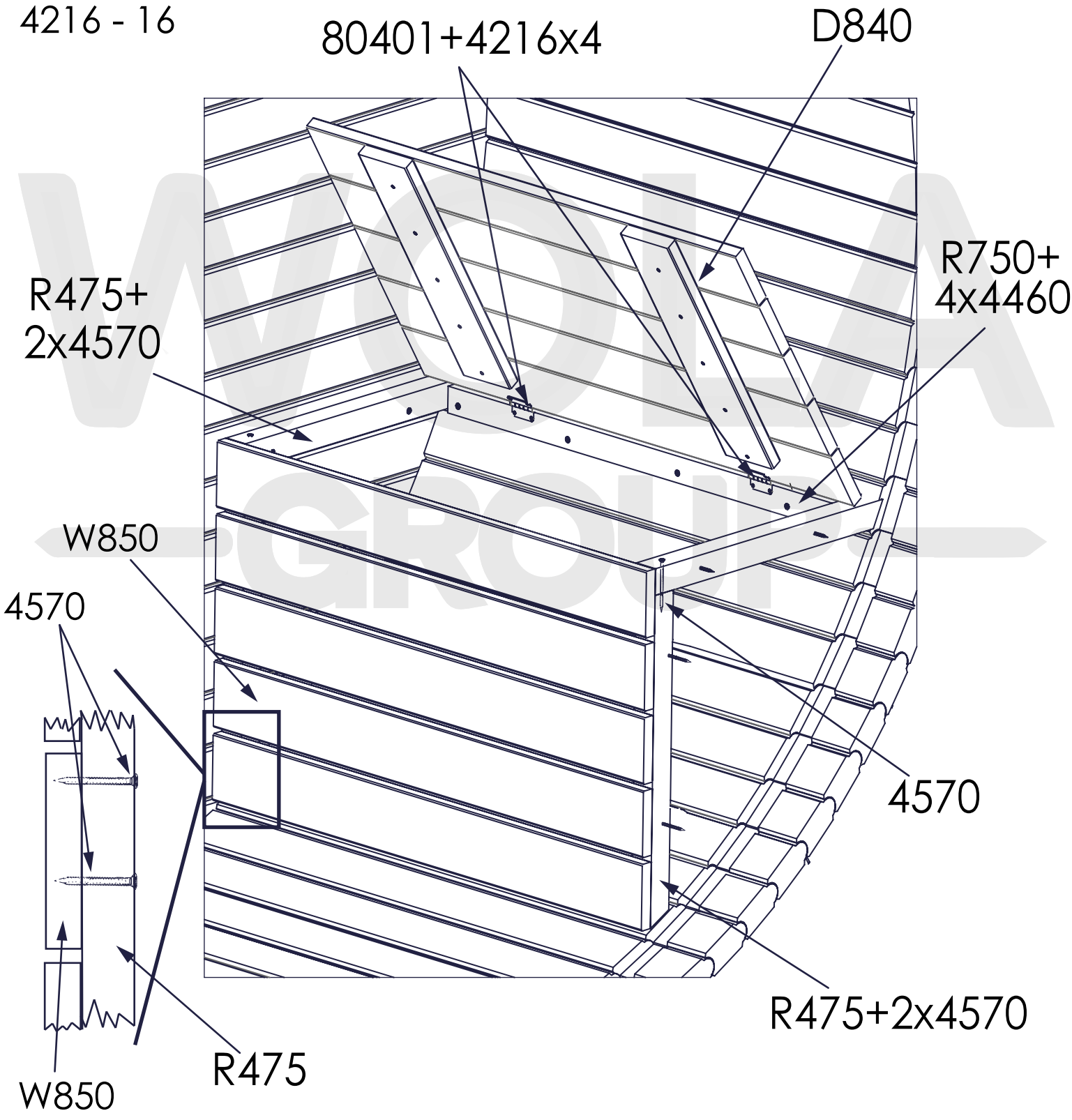

L60 - 4
K60 - 8
2012 - 8
732012 - 4



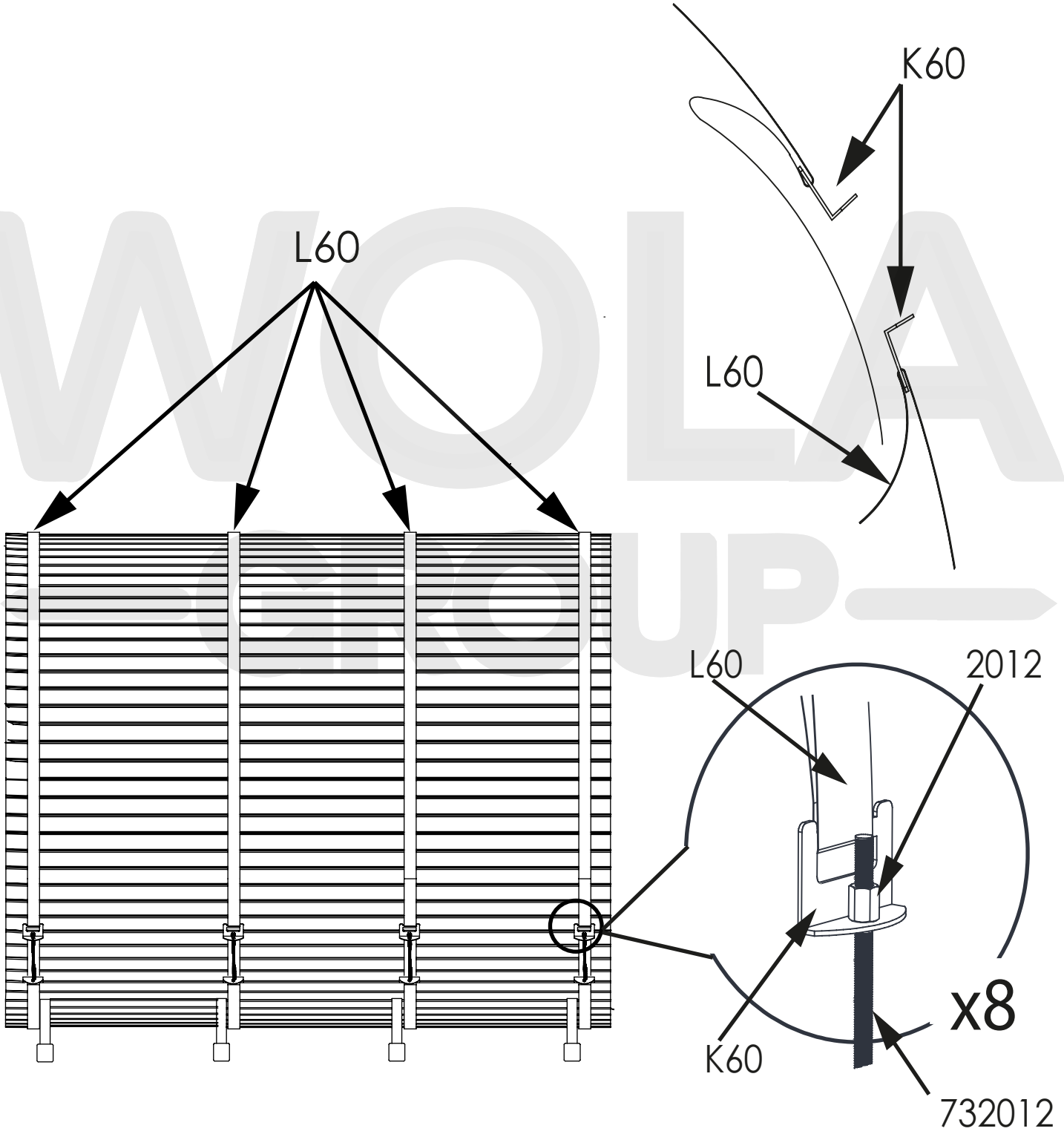

WOLA GROUP

for stove set installing see **Appendix 3**

SET3

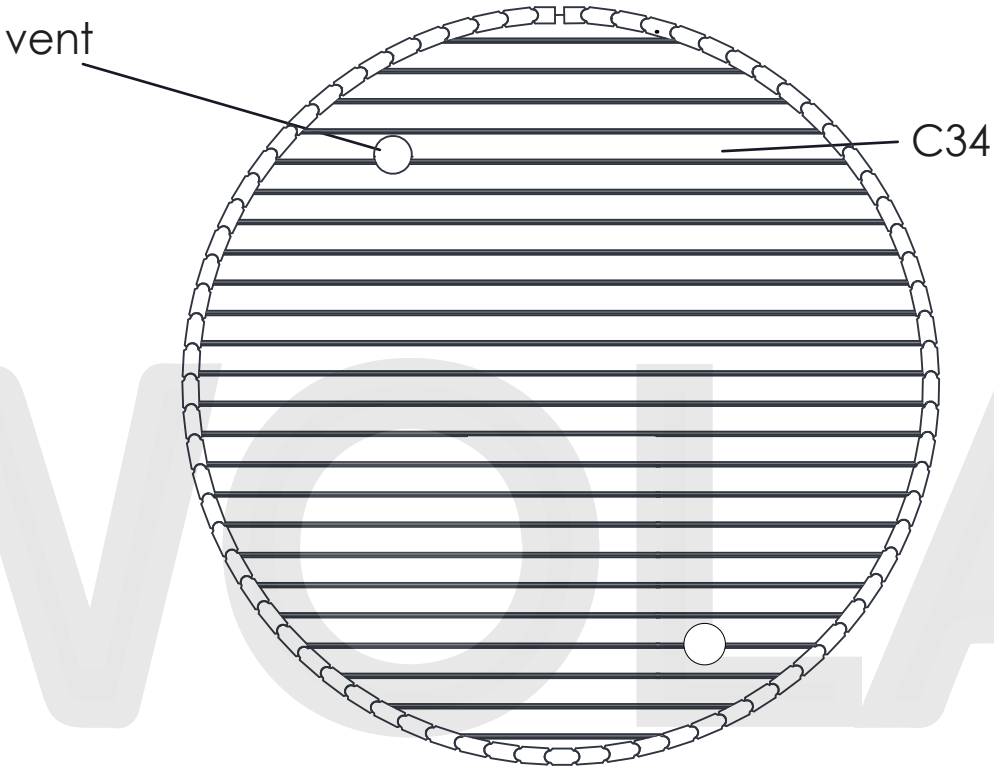

WOLA GROUP

IN OUT

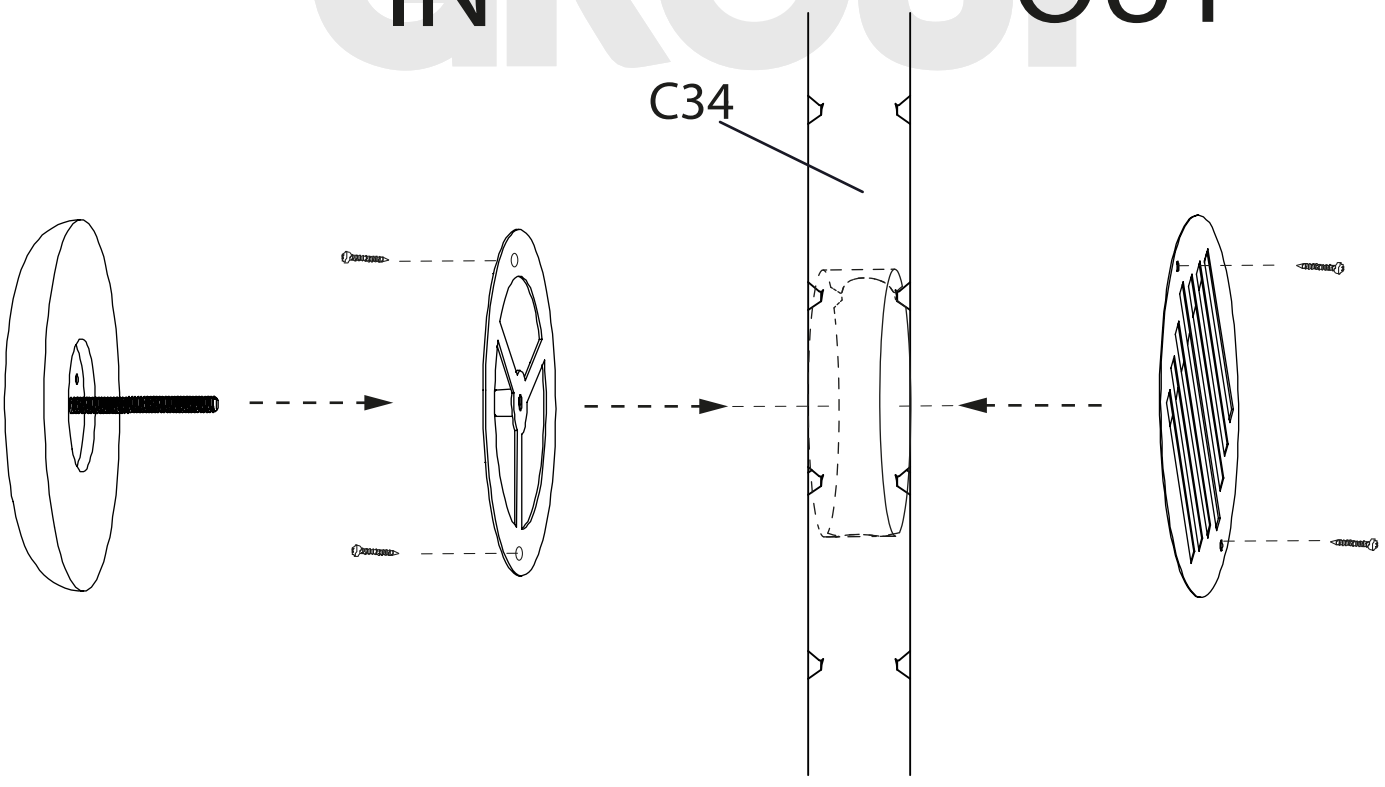

W1800 - 1
W850 -1
W80 - 4
4345 - 22

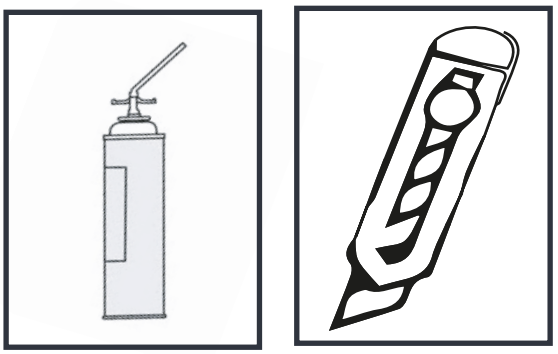

ROOF (inside view)

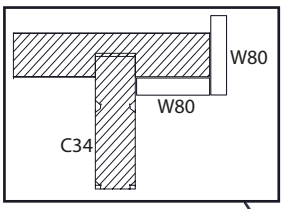

W80x2+
+4345x4

W850+4345x6

W1800+4345x8

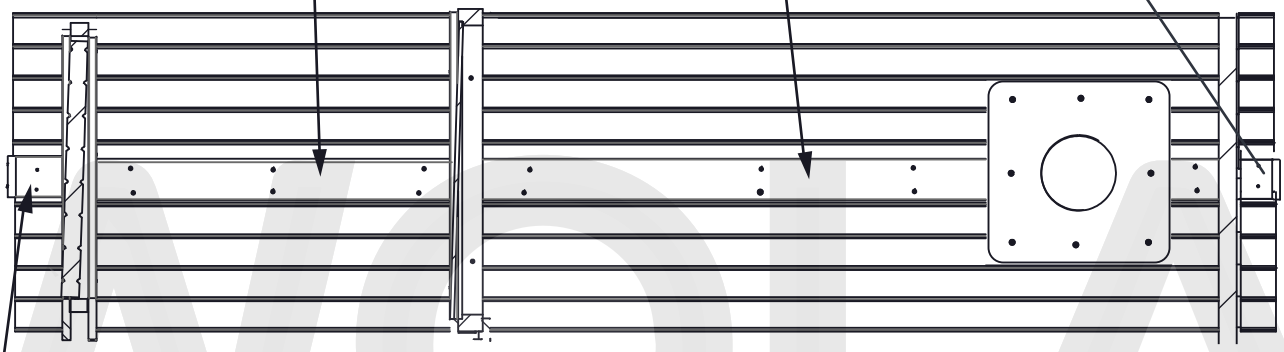

W80+4345x2

rock wool



W80+4345x2

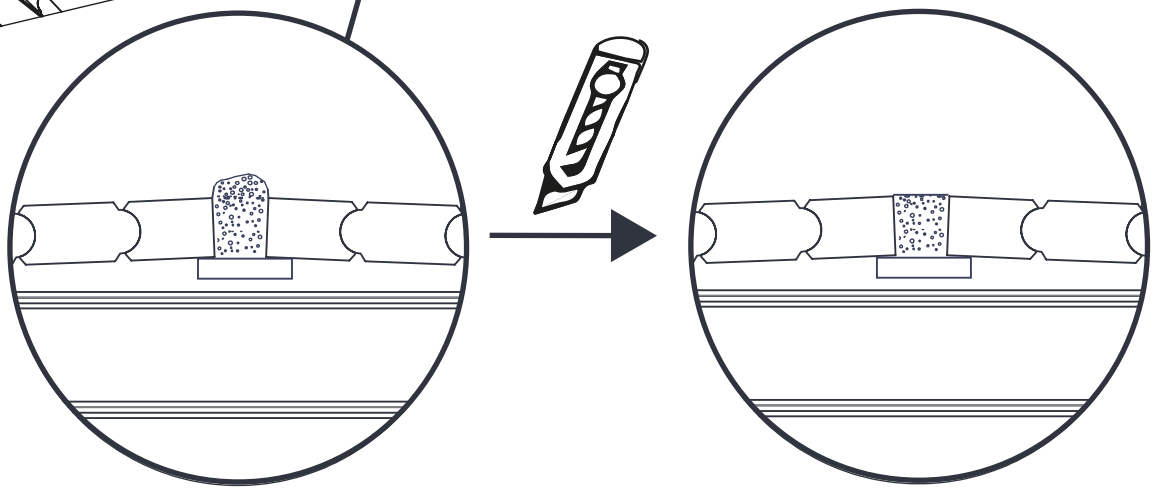

DG1800 - 1
4570 - 8
J- 8

DOOR INSTALATION
outside view

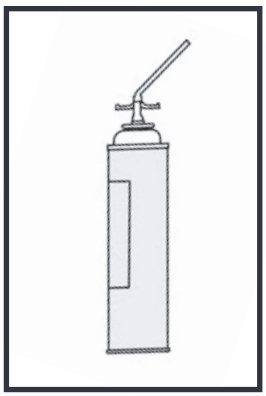

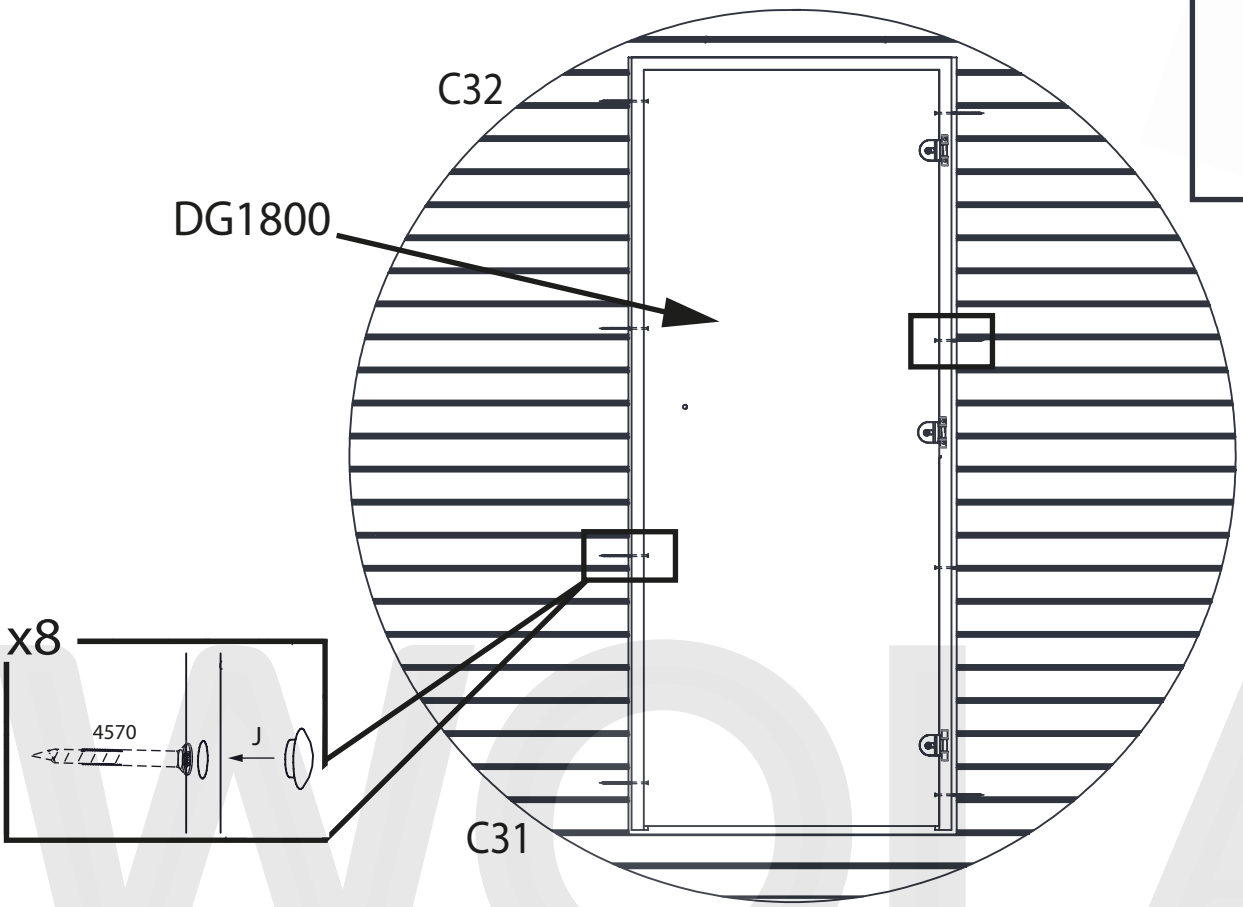

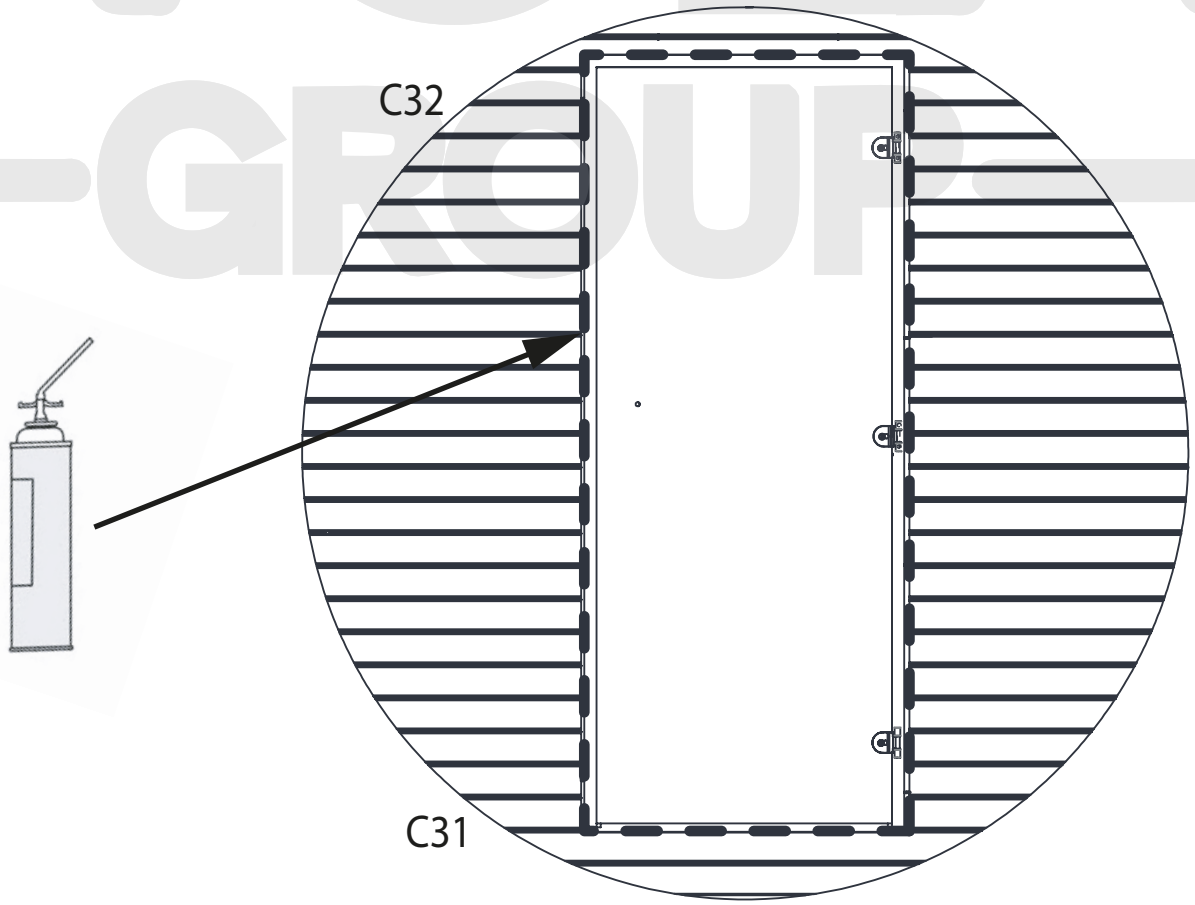

WOLA GROUP

W1800 - 2
W840 - 1
4345- 16

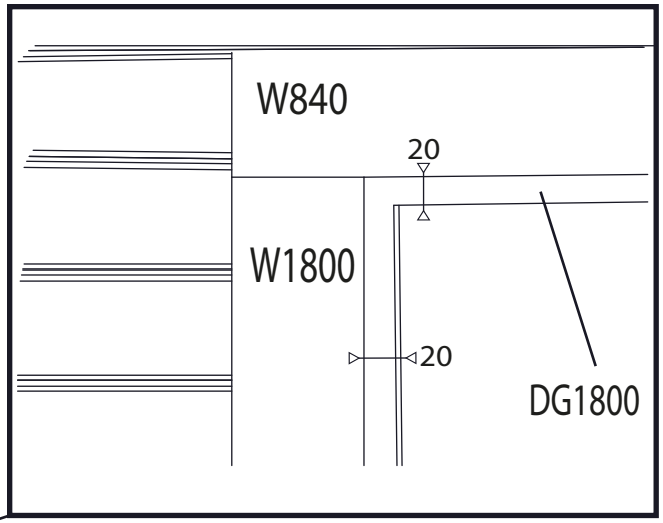

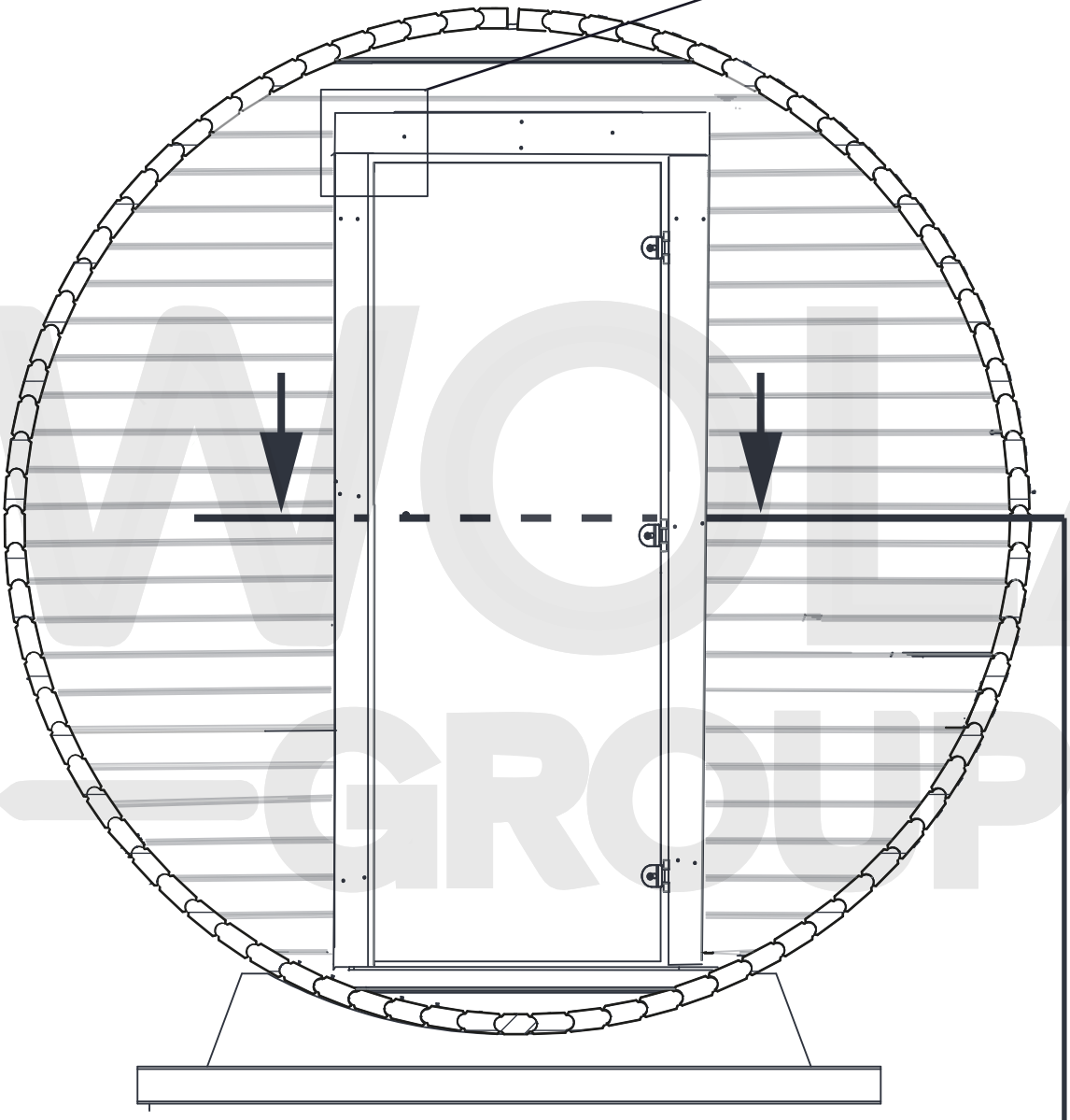

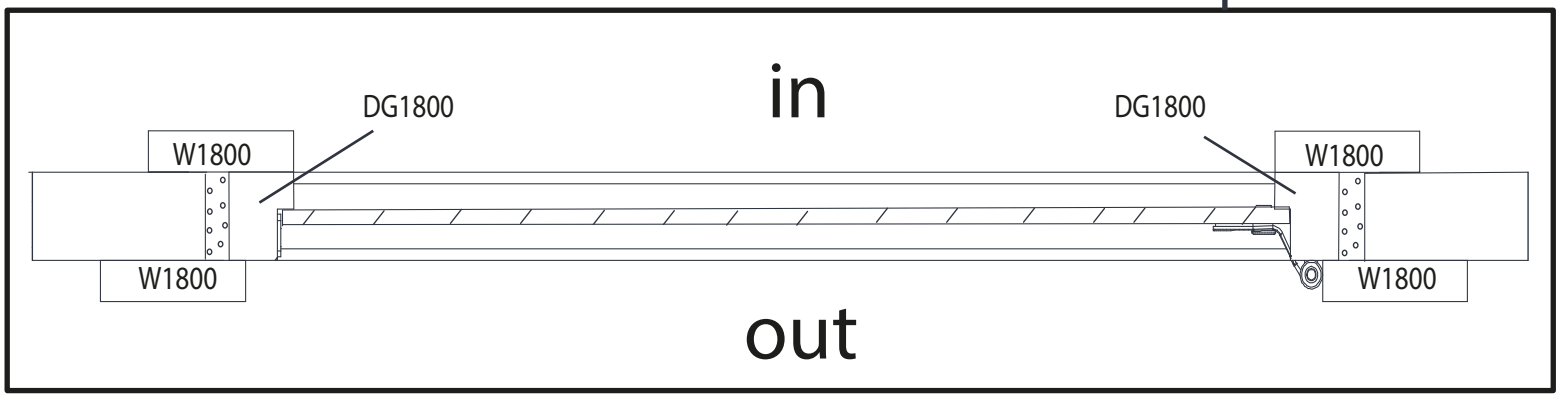

W840 - 1
W1800 - 2
SET2 - 1
4345- 16

DOOR INSTALATION
inside view

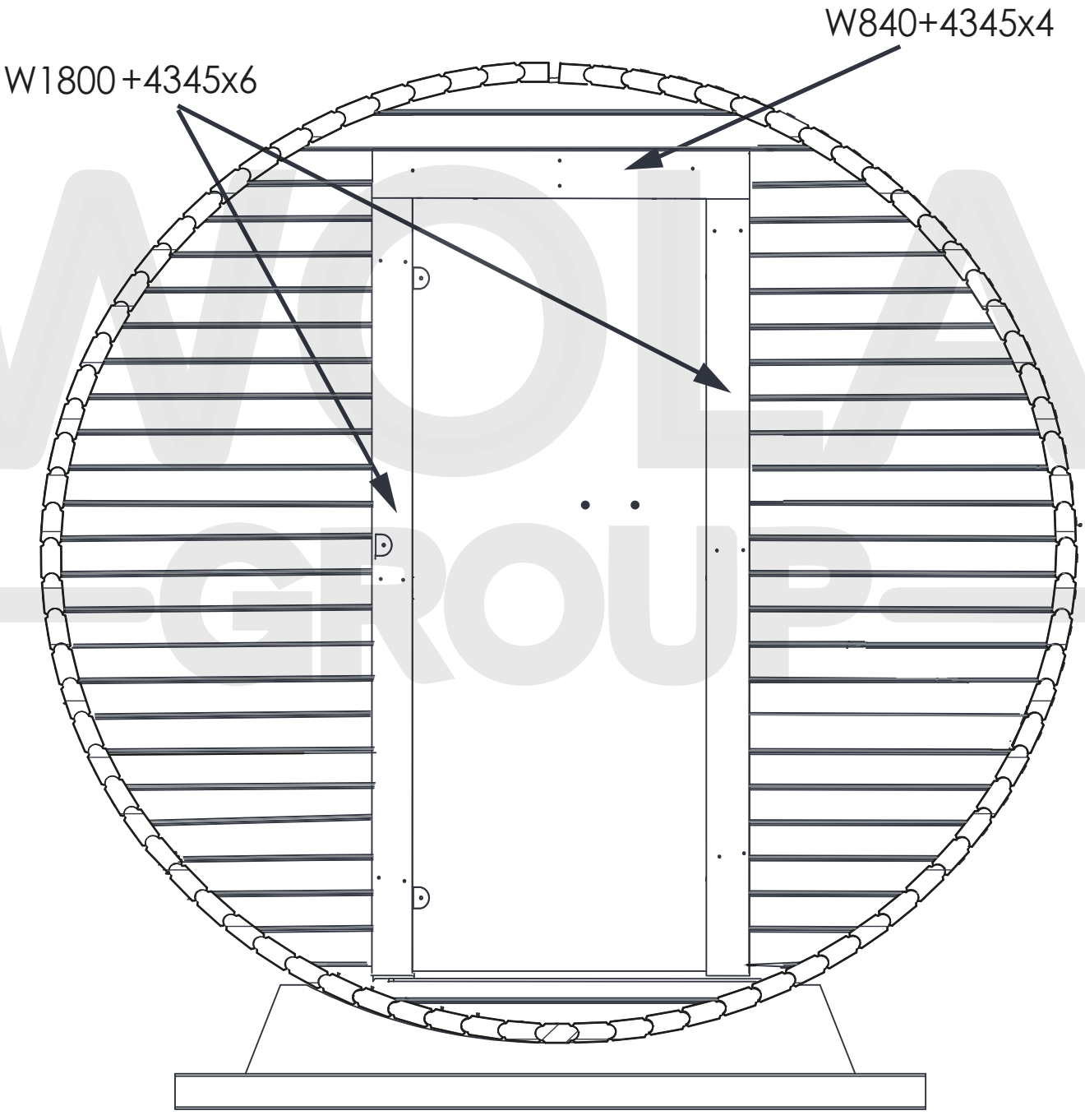

SET 2

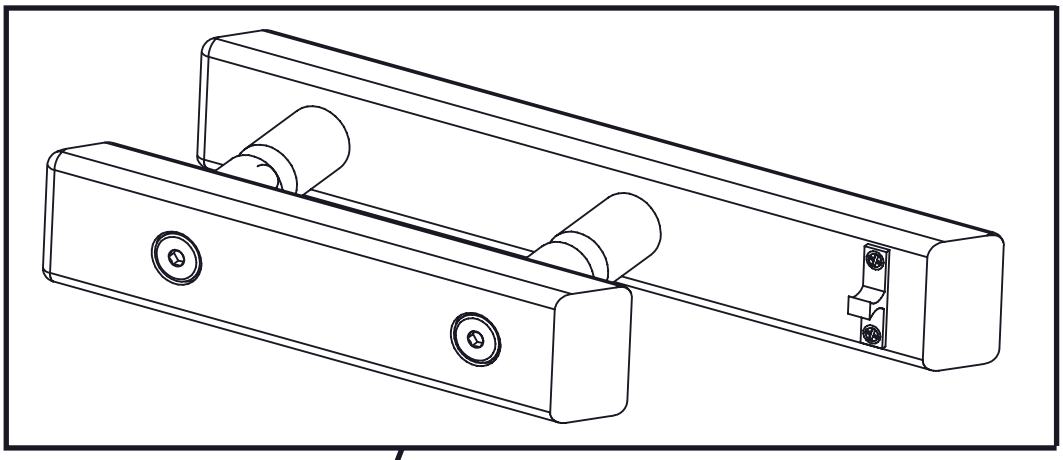

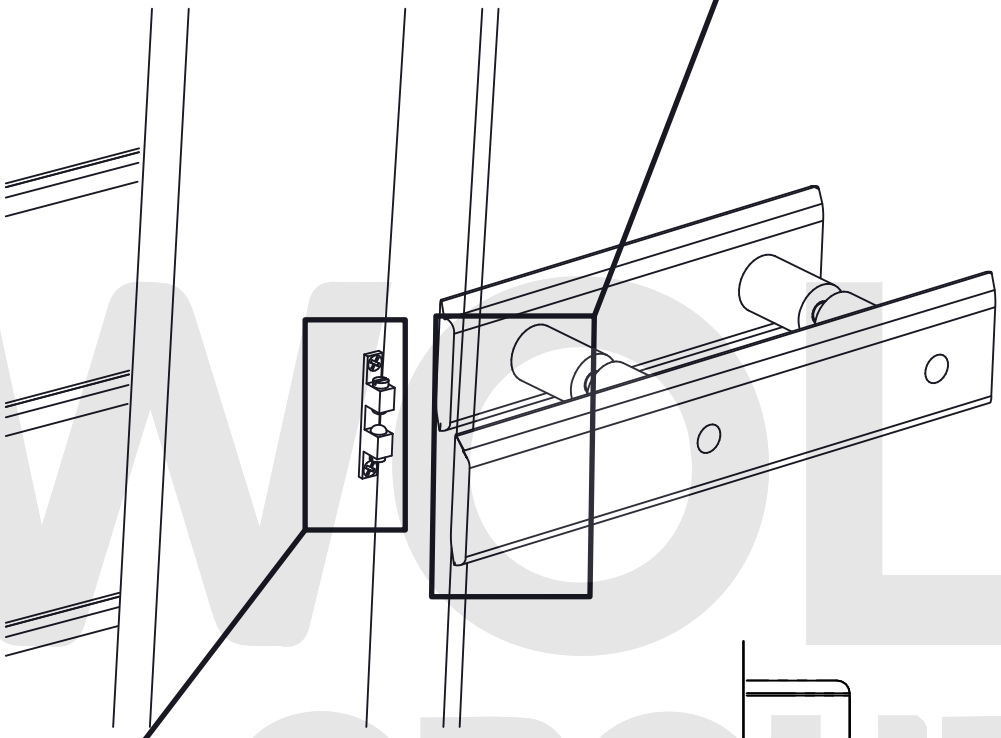

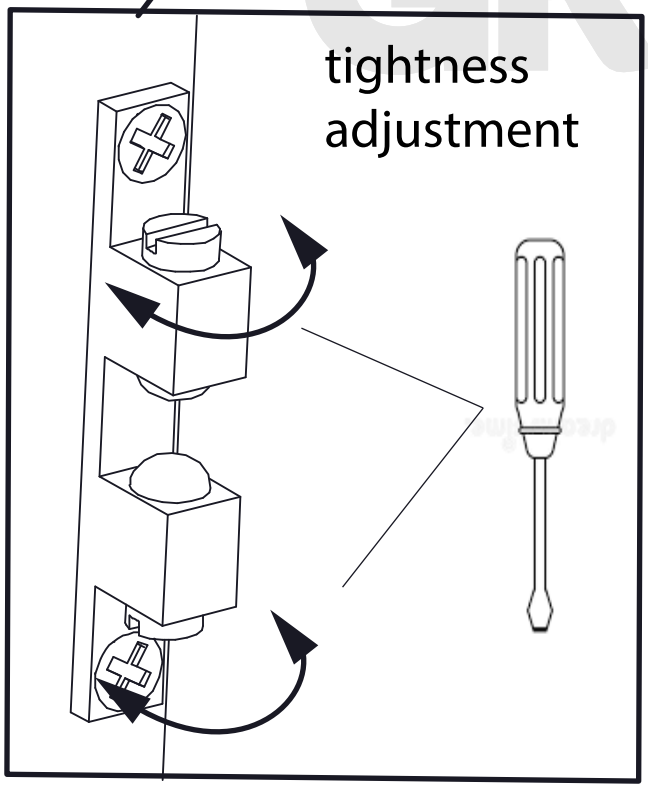

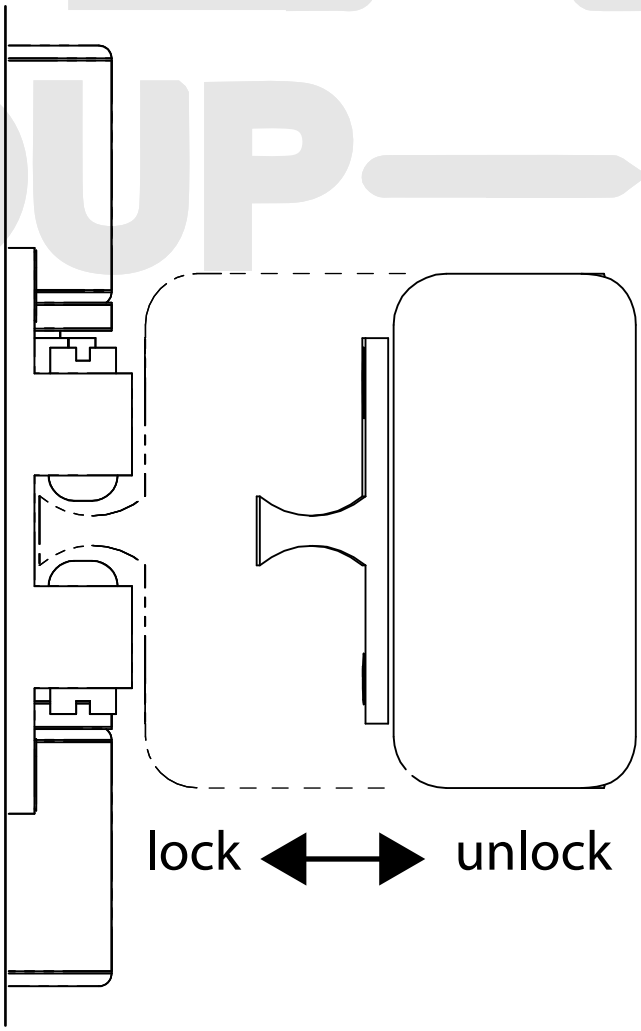

Appendix 1
ROOF FASTENING

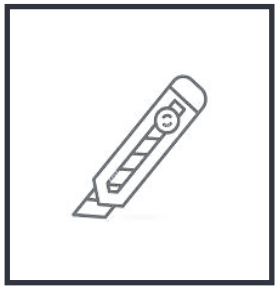



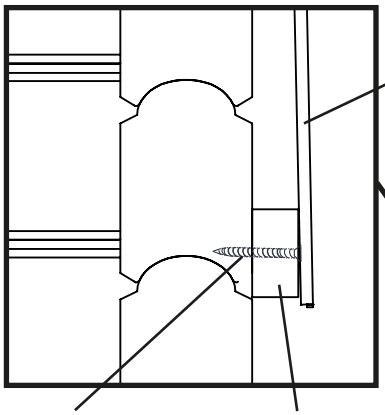

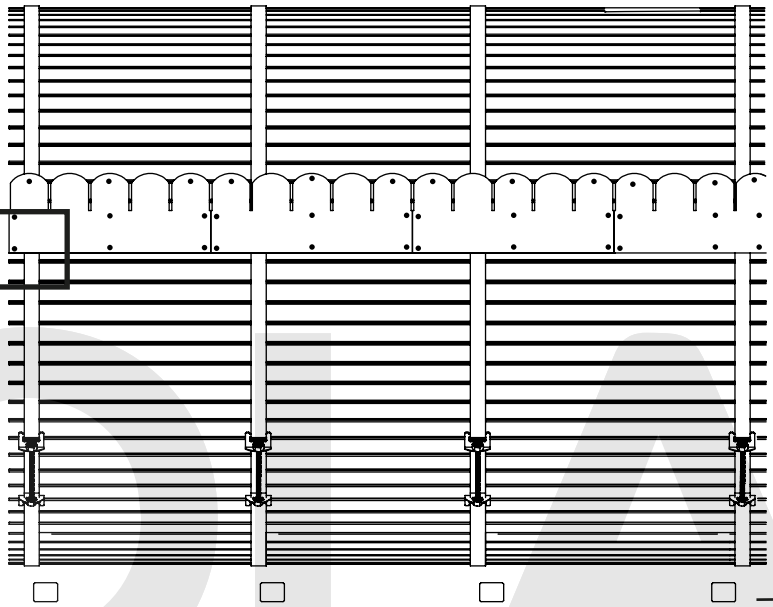

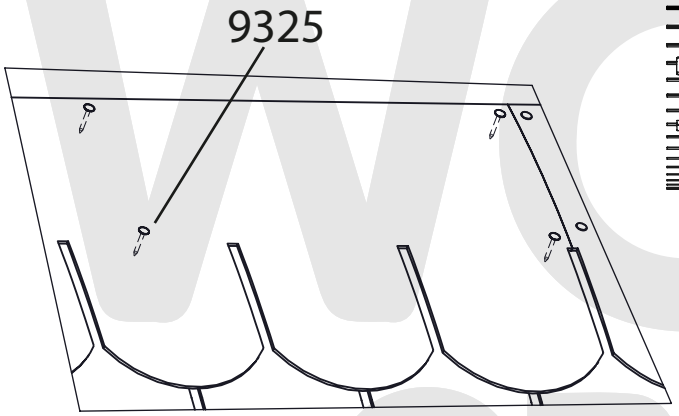

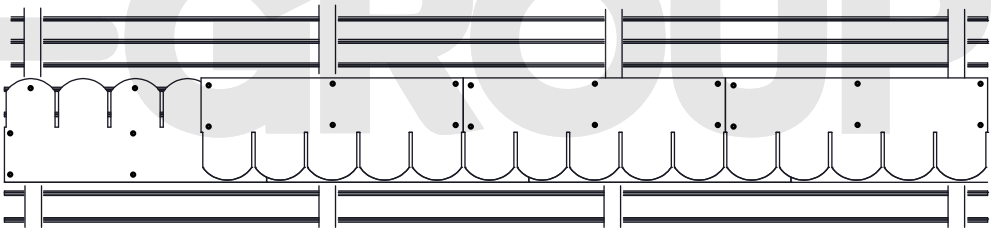

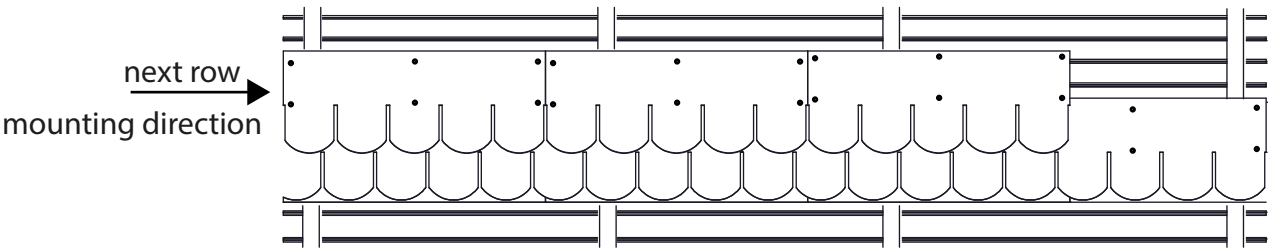

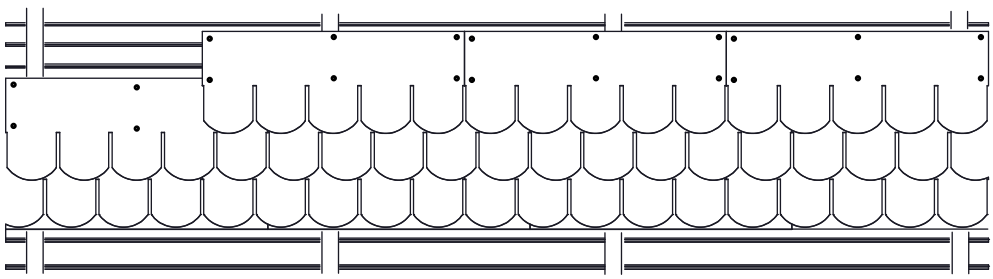

BARREL SAUNA COVERING

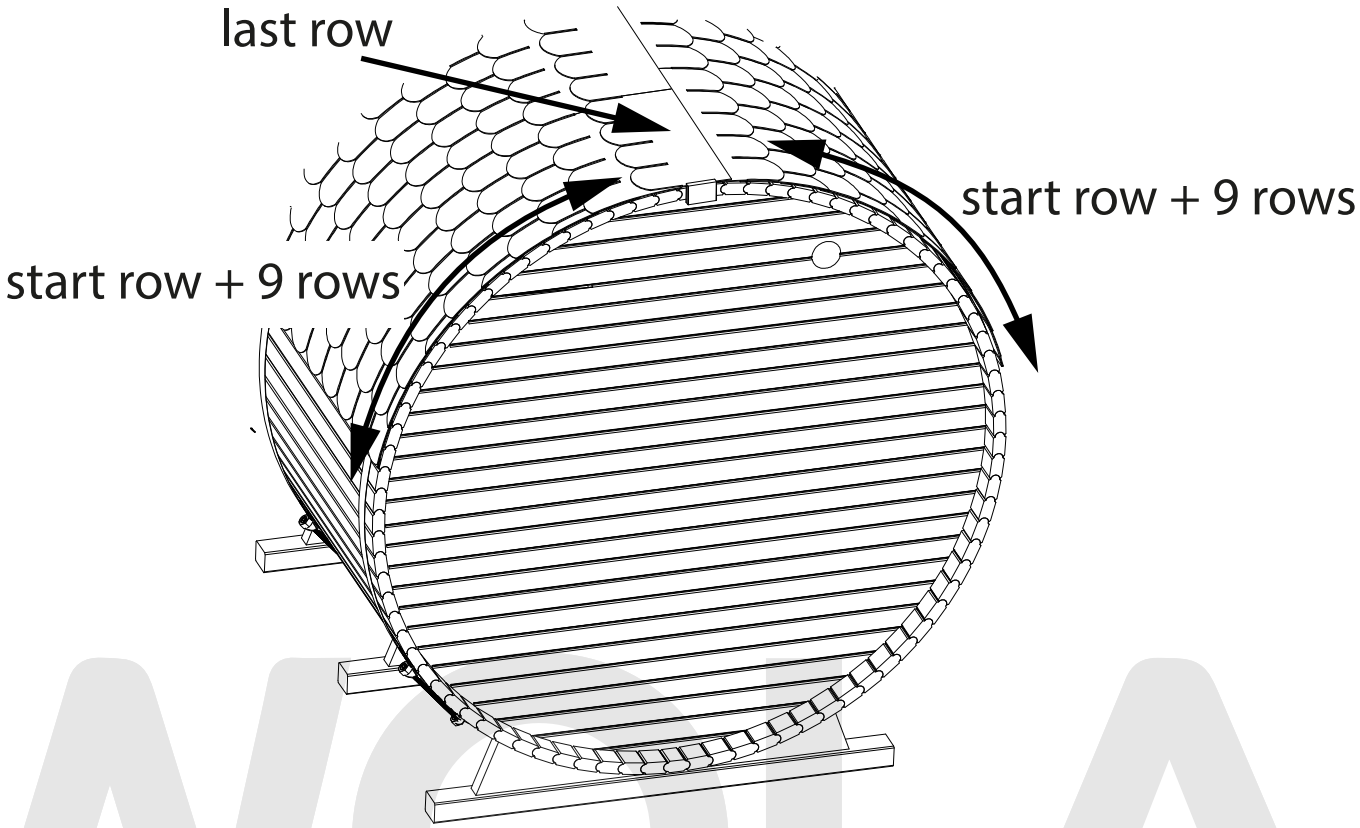

BARREL SAUNA JOINTS SEALING

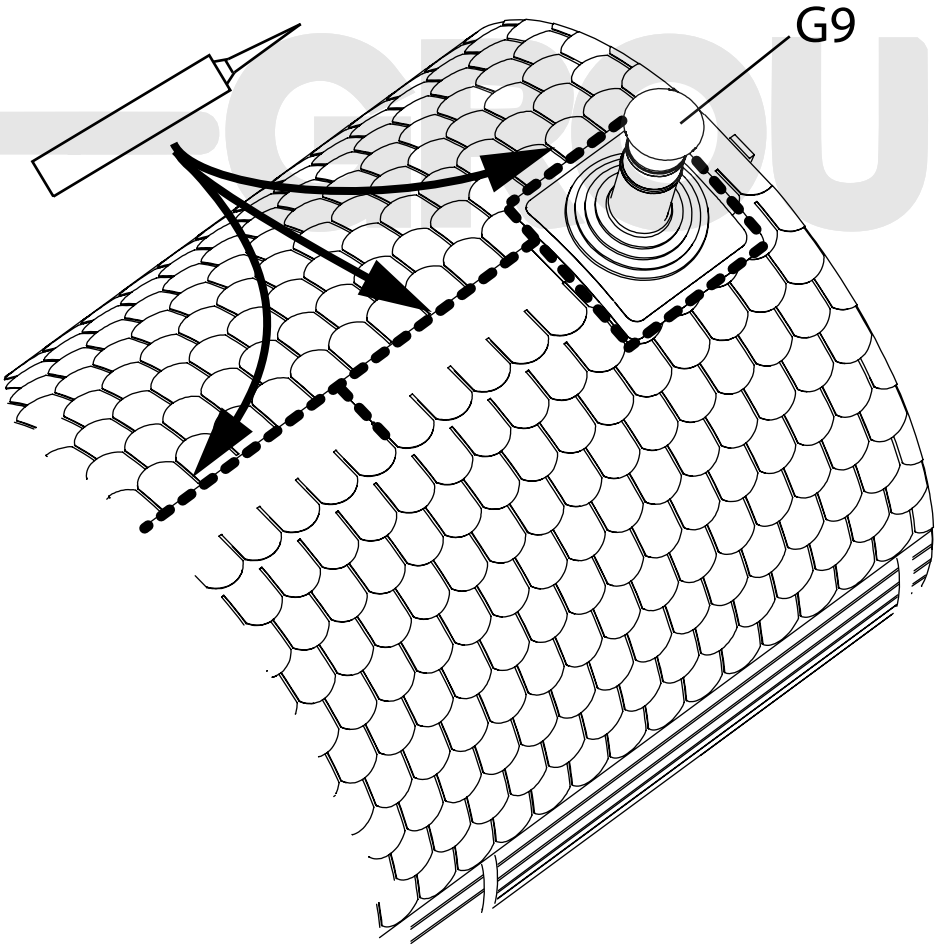

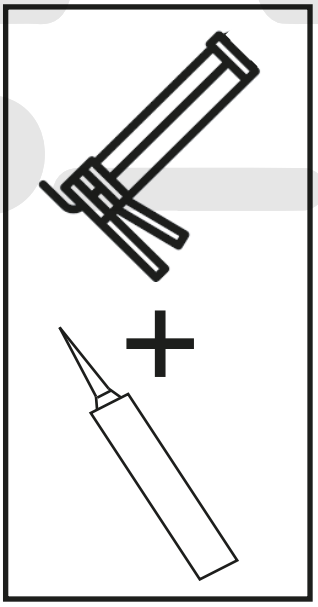

Appendix 2
PANORAMA INSTALLING

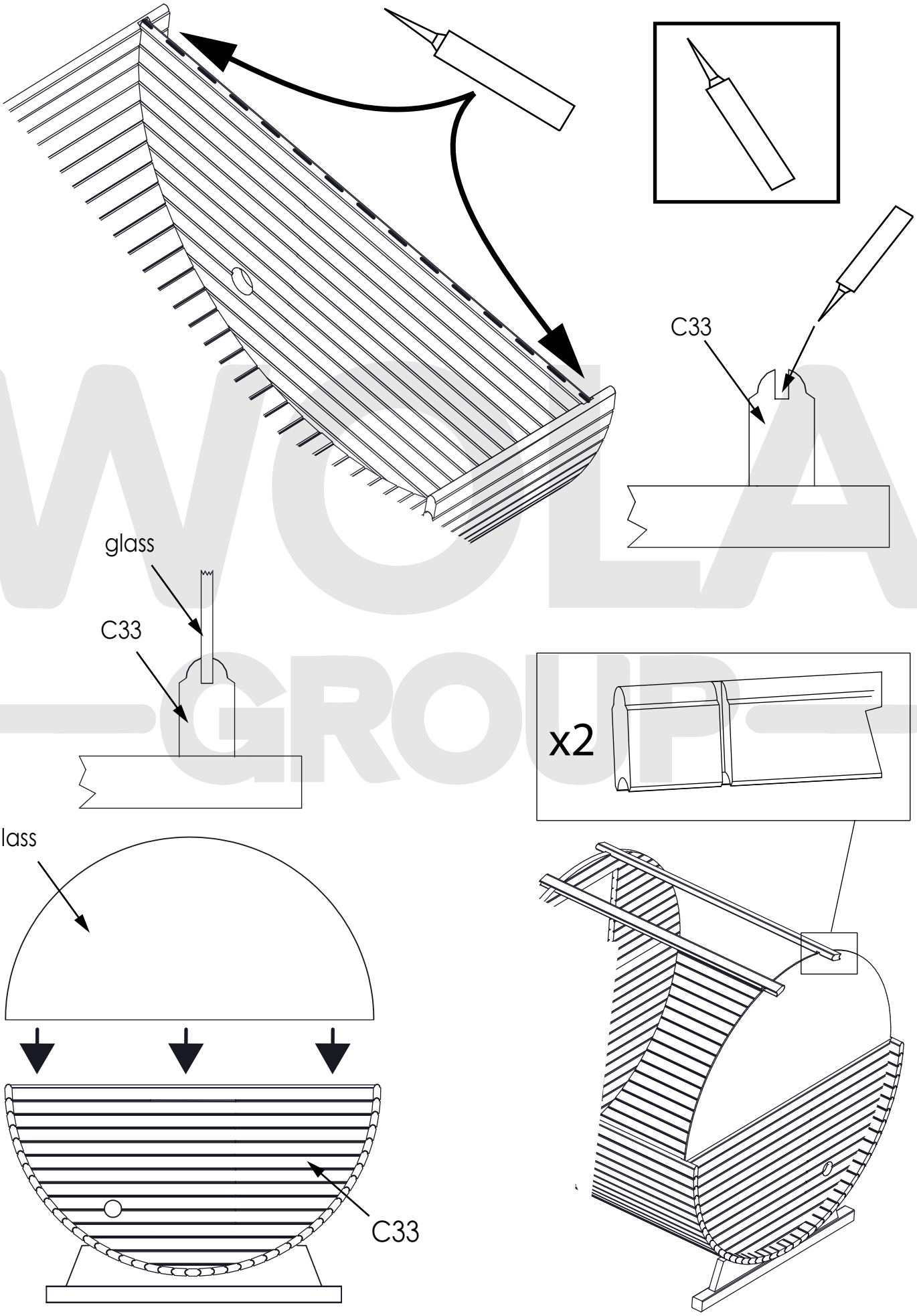

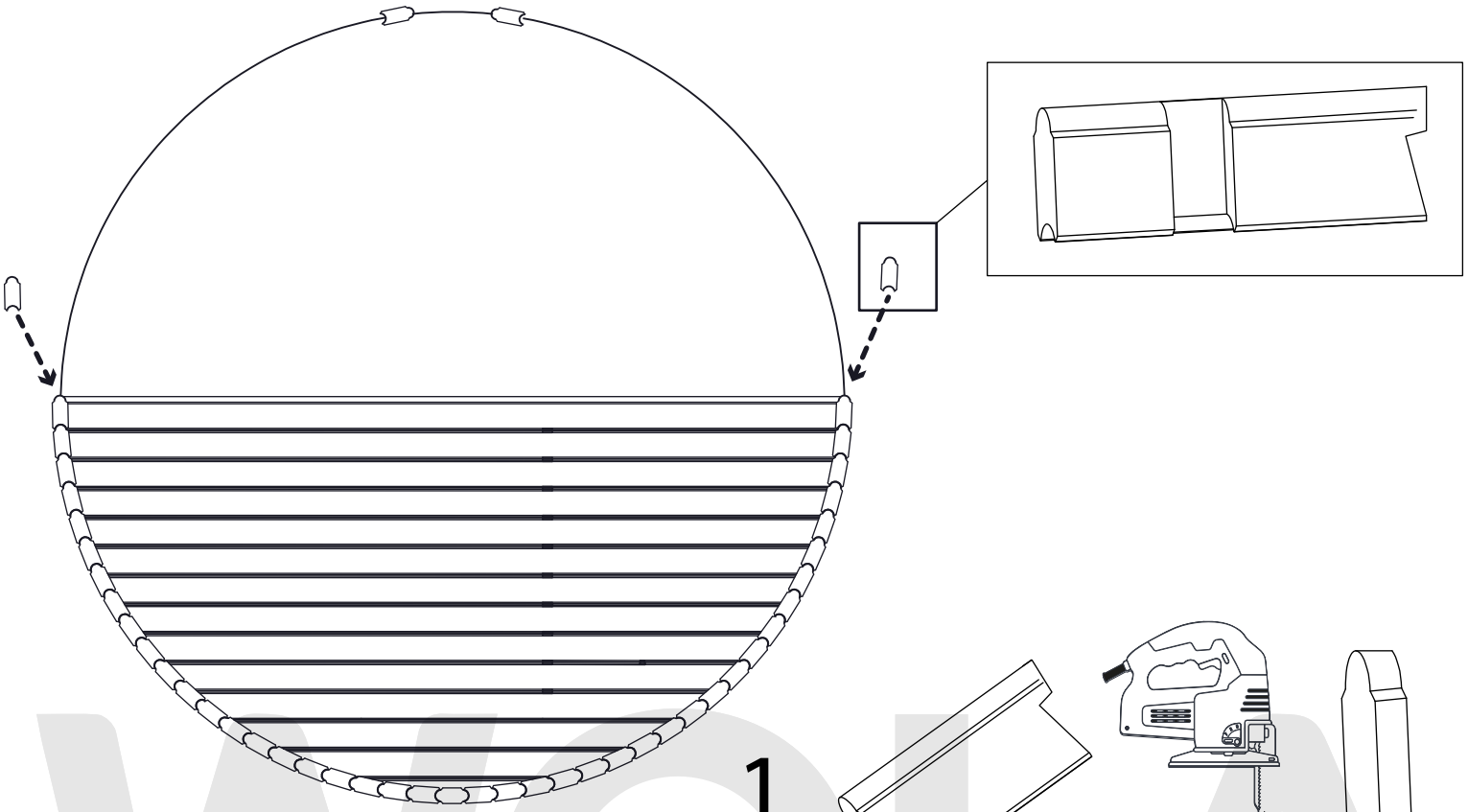

1.

2.

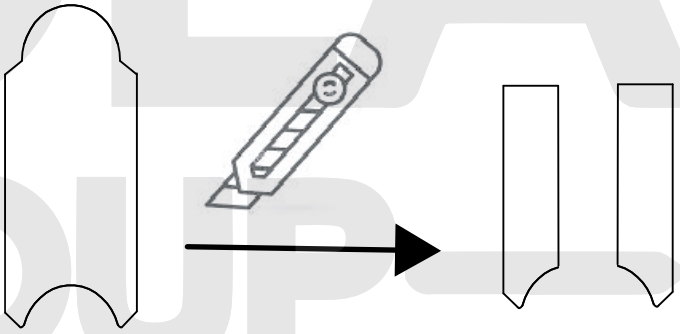

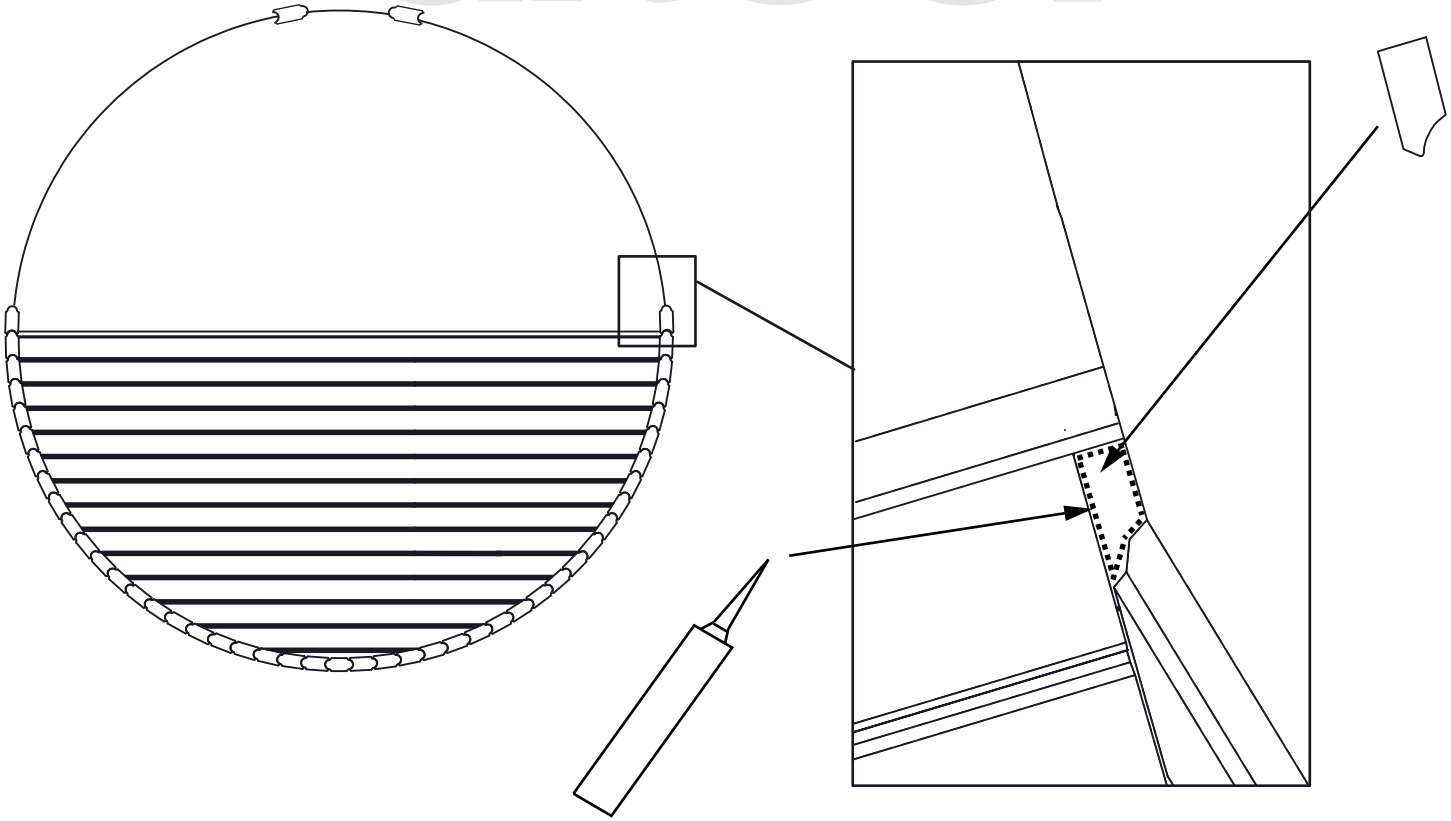

WOLA GROUP

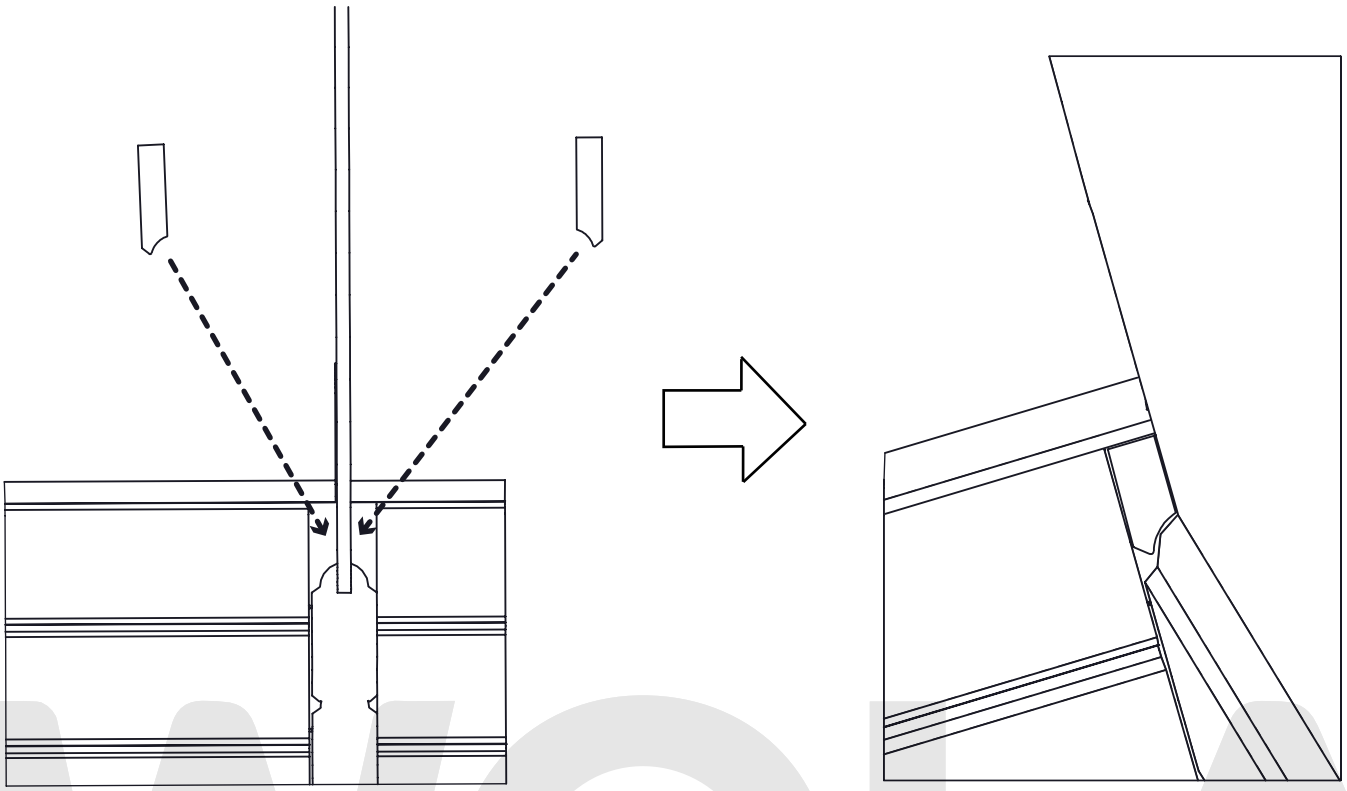

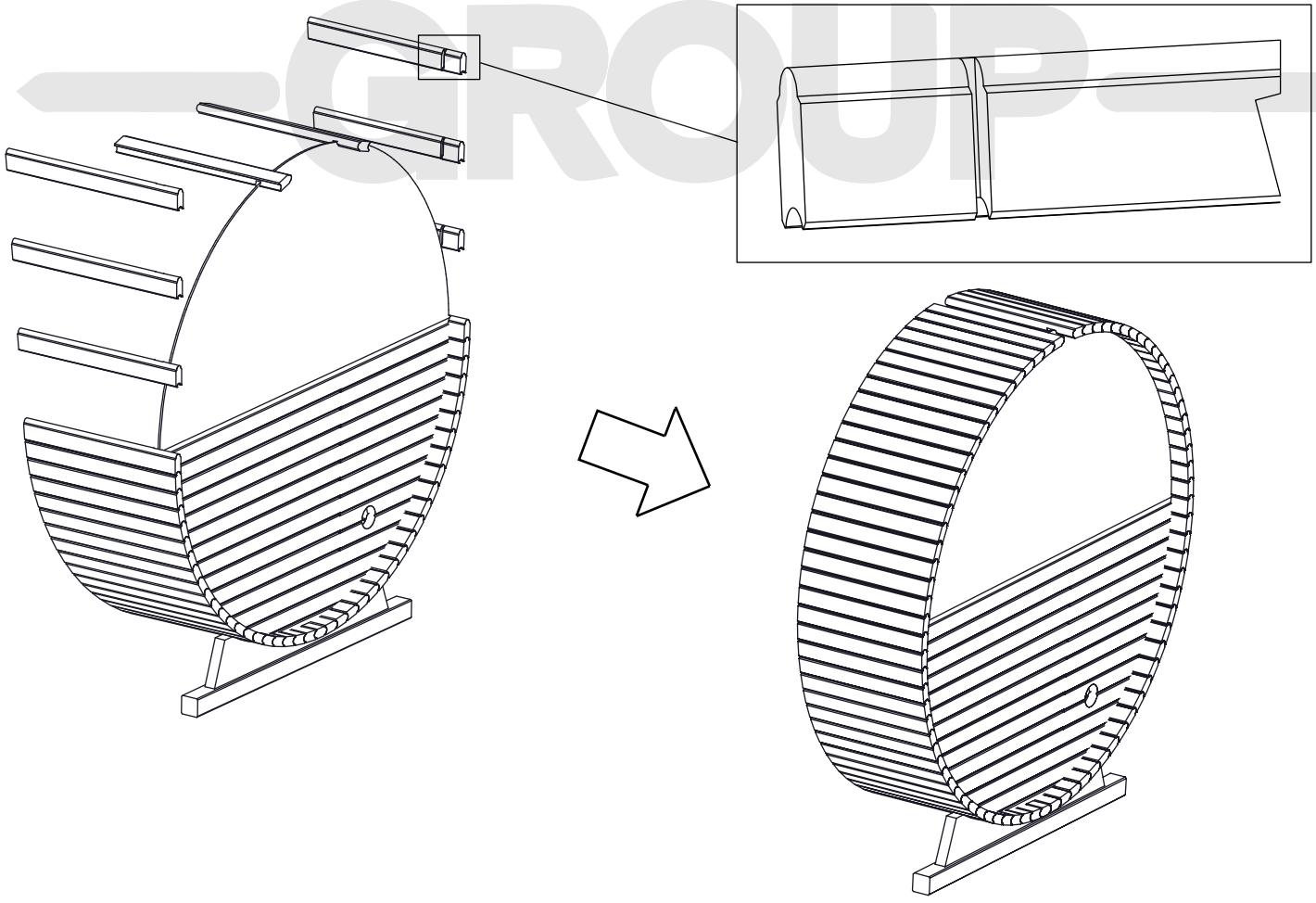

Appendix 3

WOOD-BURNING STOVE AND ELECTRIC STOVE INSTALLING

for set stove only!

COMMON STOVE ASSEMBLING

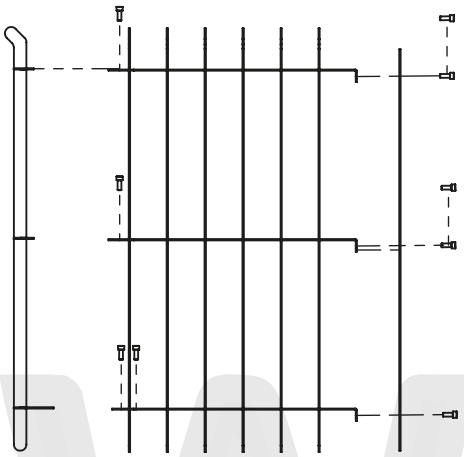

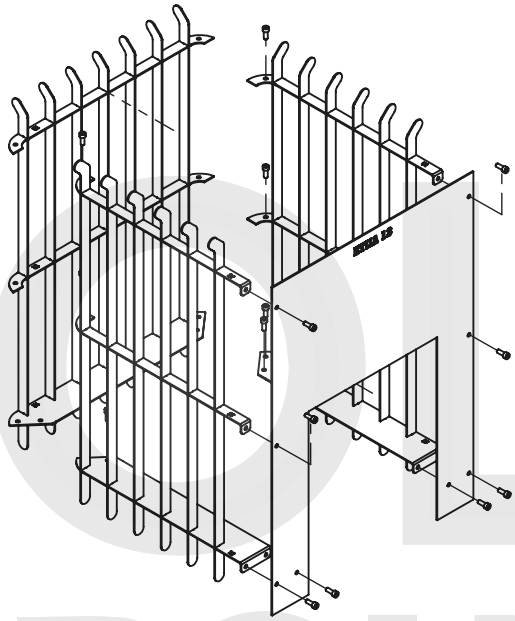

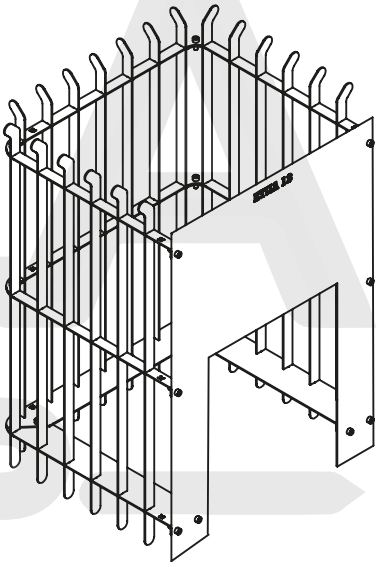

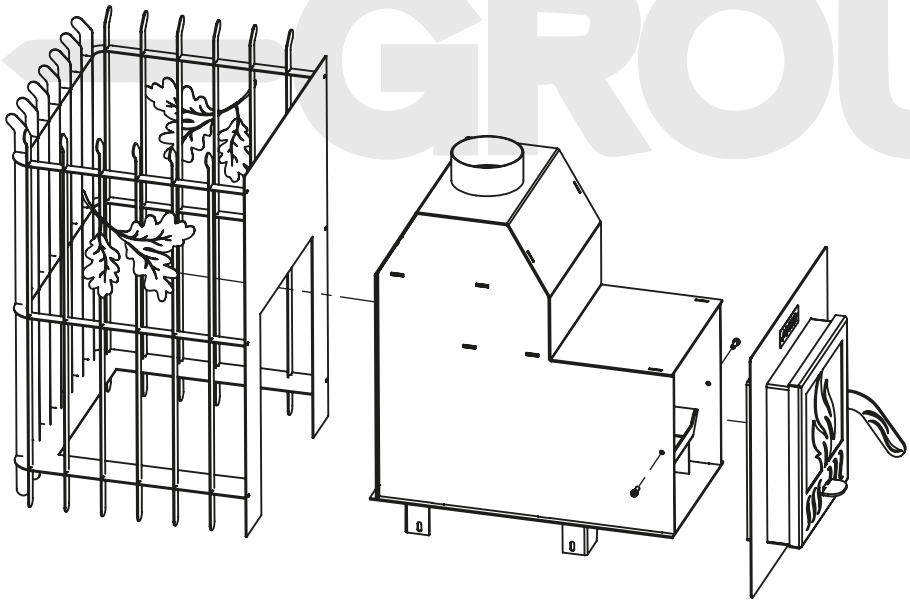

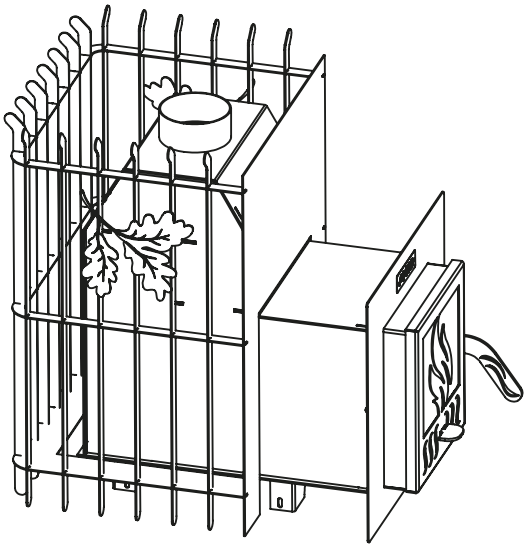

WOLA GROUP

PL

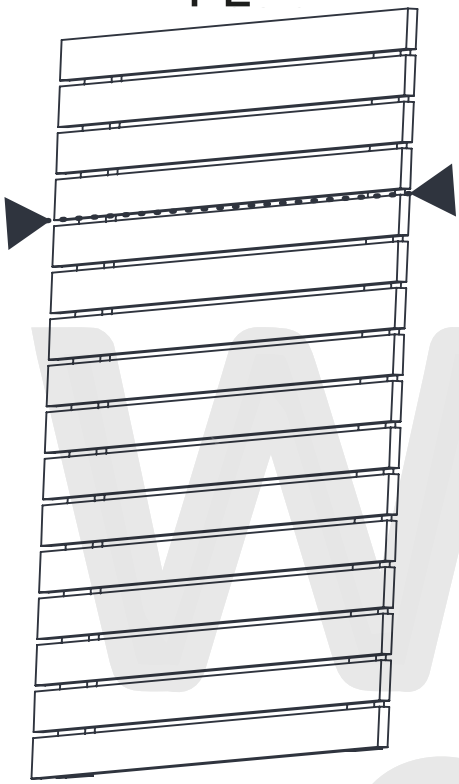



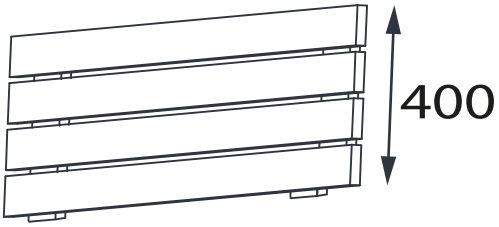

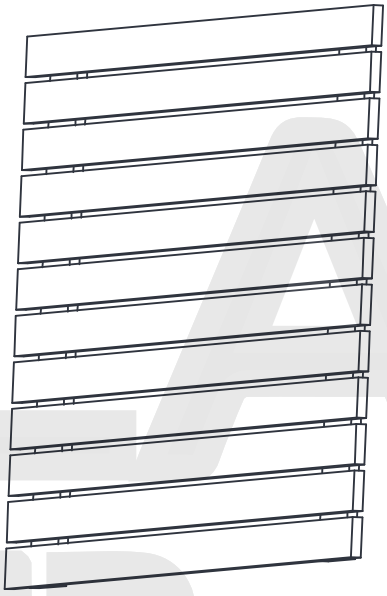

WOLA GROUP

R400 - 2
4570 - 6

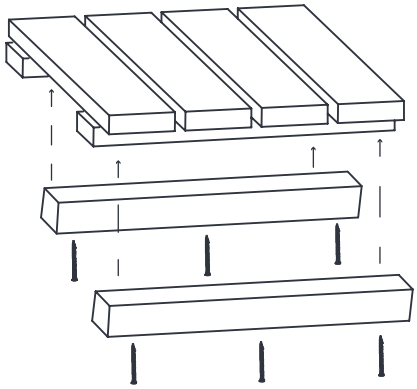

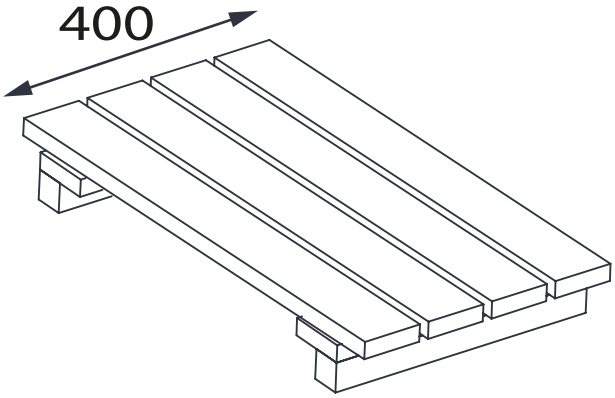

G1

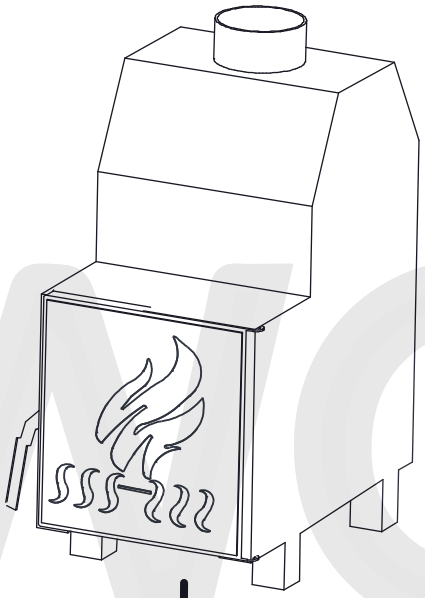

G5

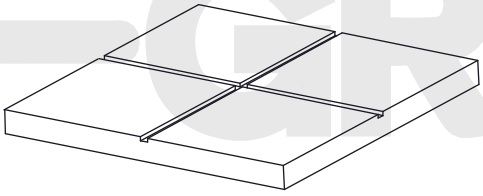

400

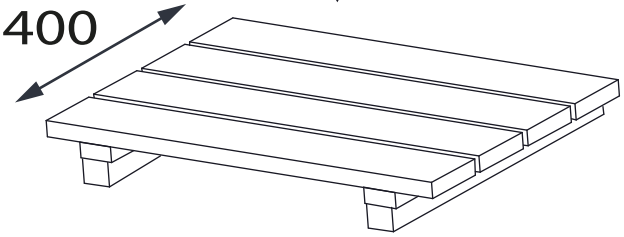

ELECTRIC STOVE

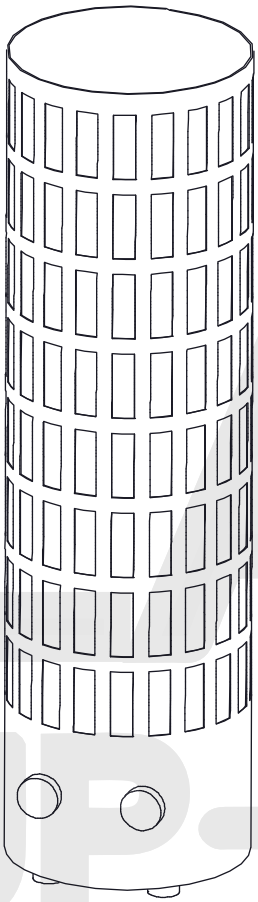

400

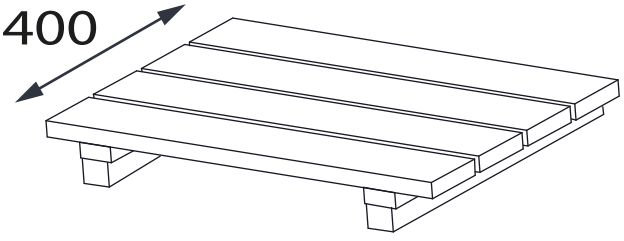

WOLA GROUP

PIPE HOLE FOR INNER STOVE DOOR

Q2 - 1
4216 - 8

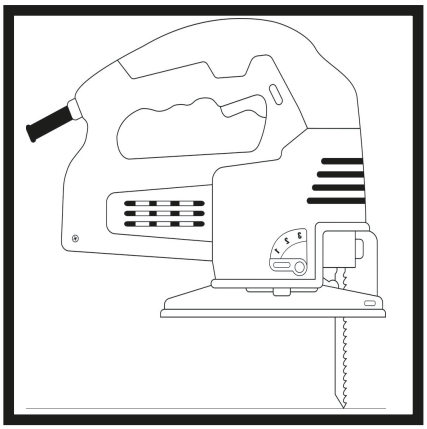

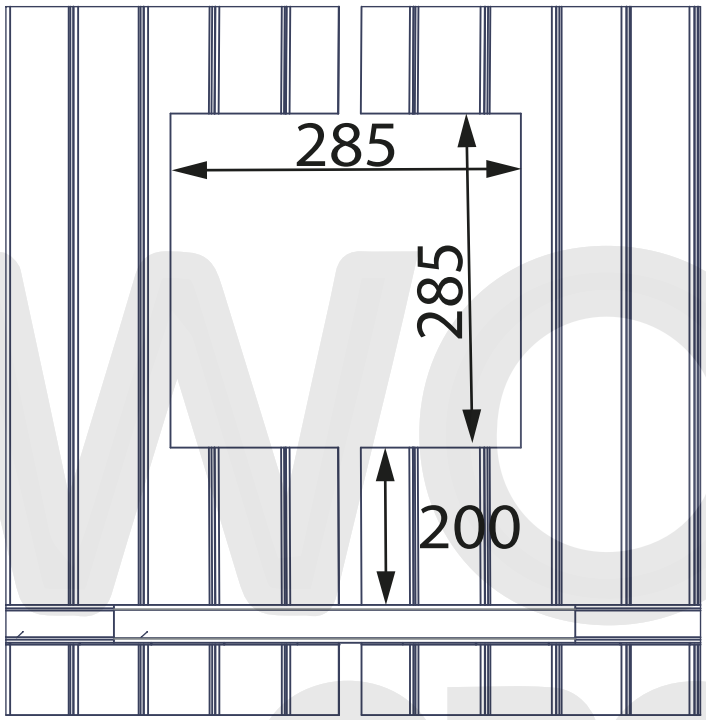

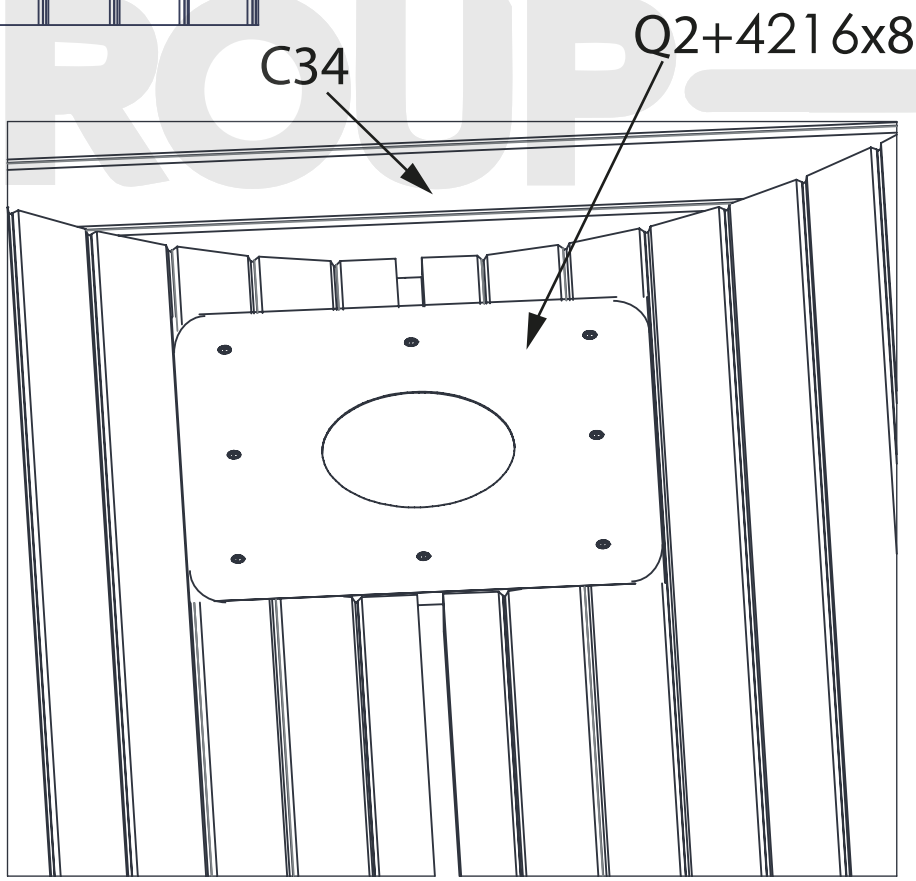

WOLA GROUP

INNER STOVE DOOR, INSIDE VIEW

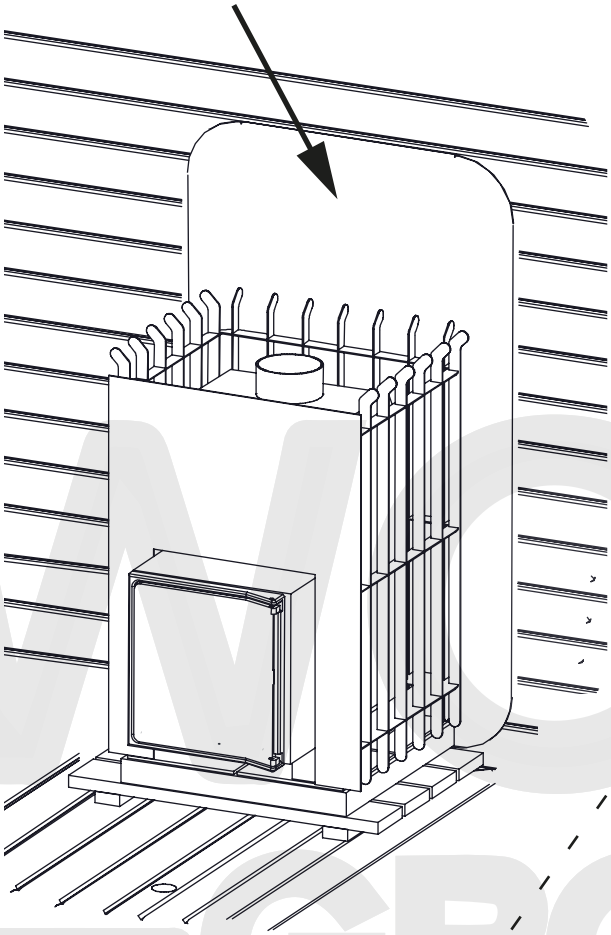

G1 - 1
G4 - 1
Q3 - 1
4216 - 10

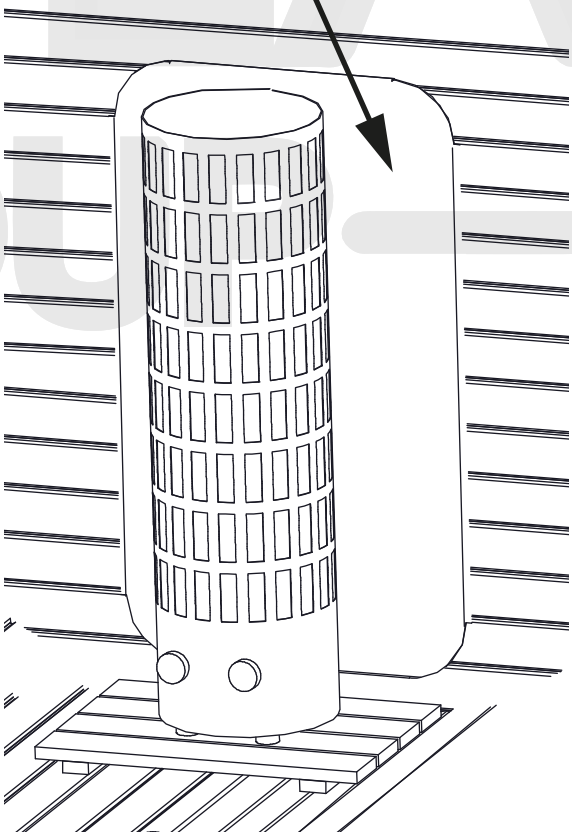

Q3 - 1
4216 - 10

ELECTRIC STOVE, INSIDE VIEW

PIPE HOLE FOR OUTER STOVE DOOR

not for oven with inner door!

Q2 - 1
4216 - 8

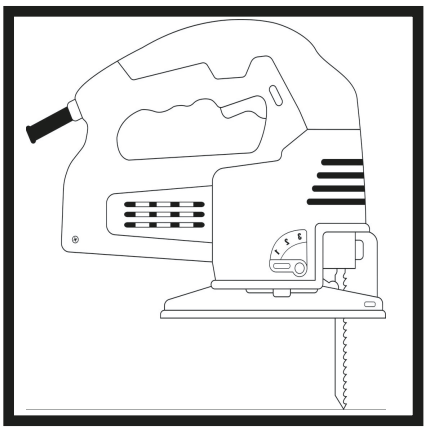

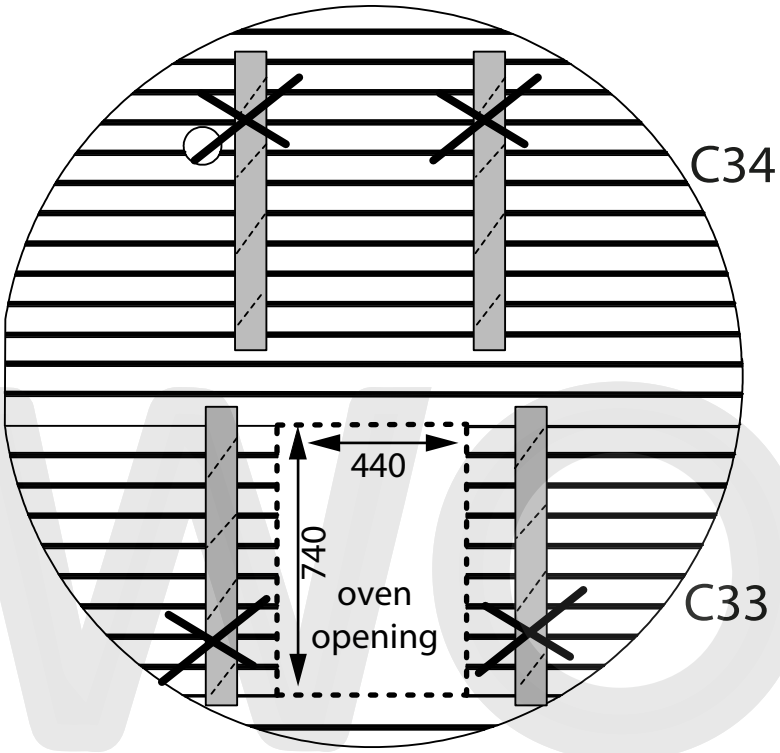

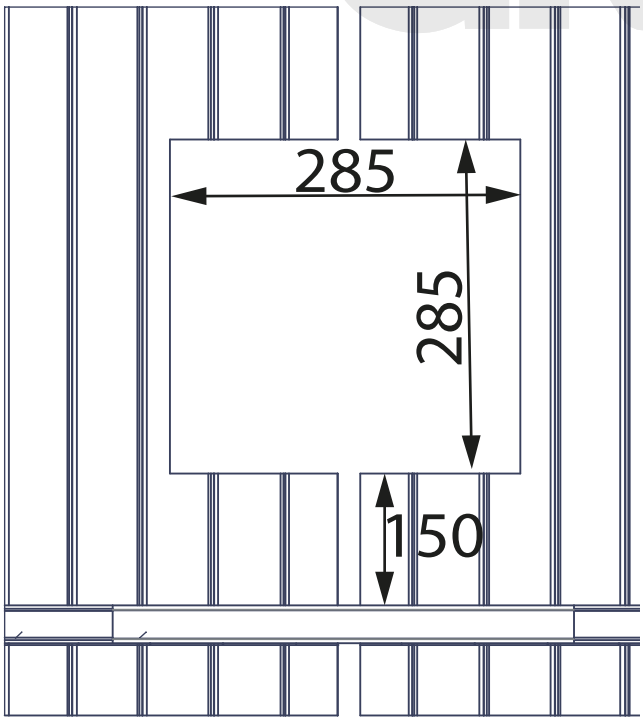

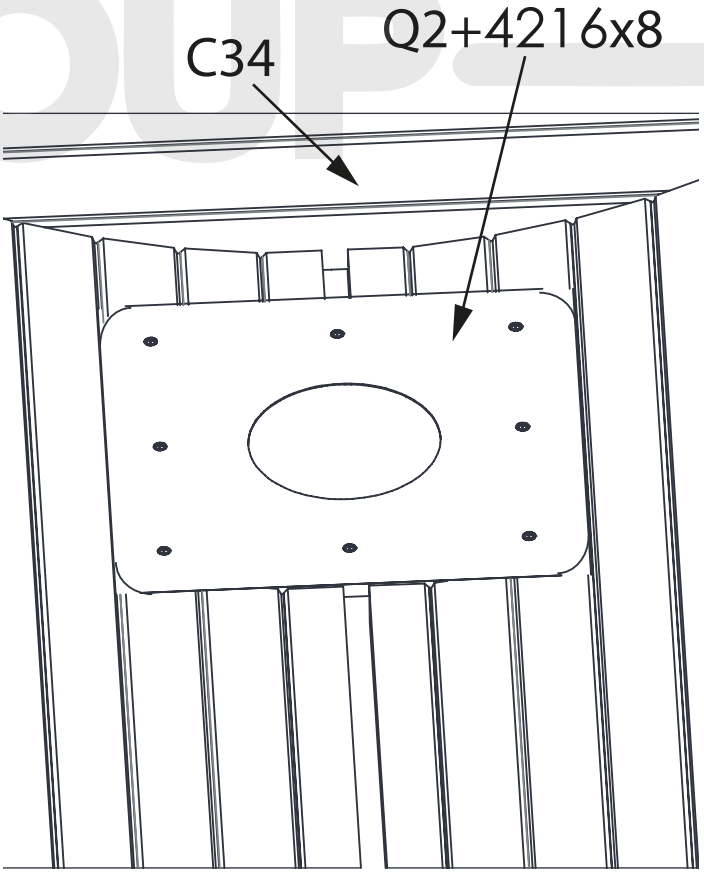

OUTER STOVE DOOR, INSIDE VIEW

G1 - 1
G4 - 1
Q3 - 1
Q4 - 1
4216 - 22

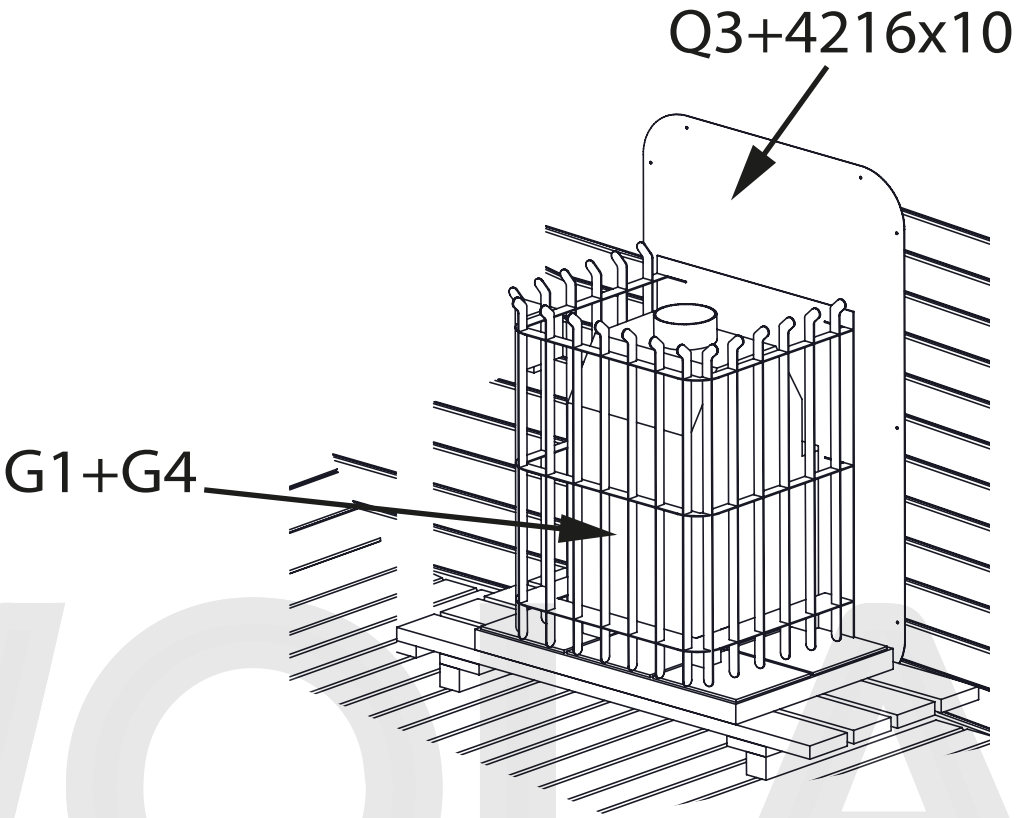

OUTER STOVE DOOR, OUTSIDE VIEW

Q4 - 1
4216 - 12

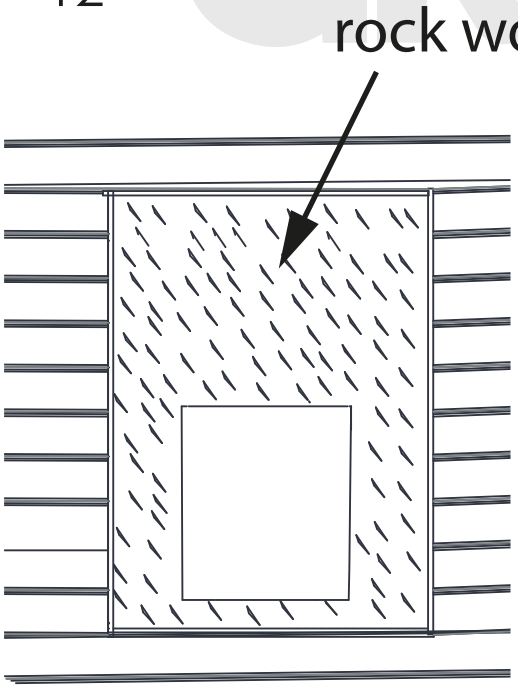

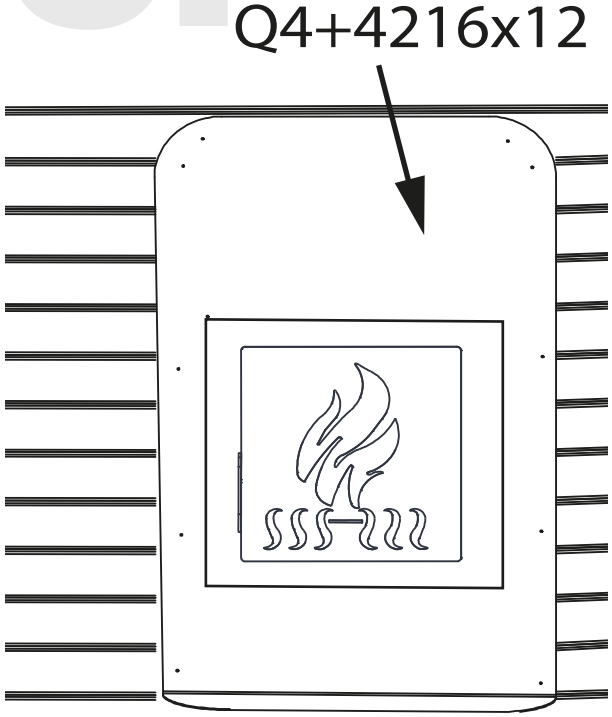

G6 - 1
G7 - 1
G12 - 1

