Sauna QUADRO 300 model
Assembly instructions
(Wood-burning stove)

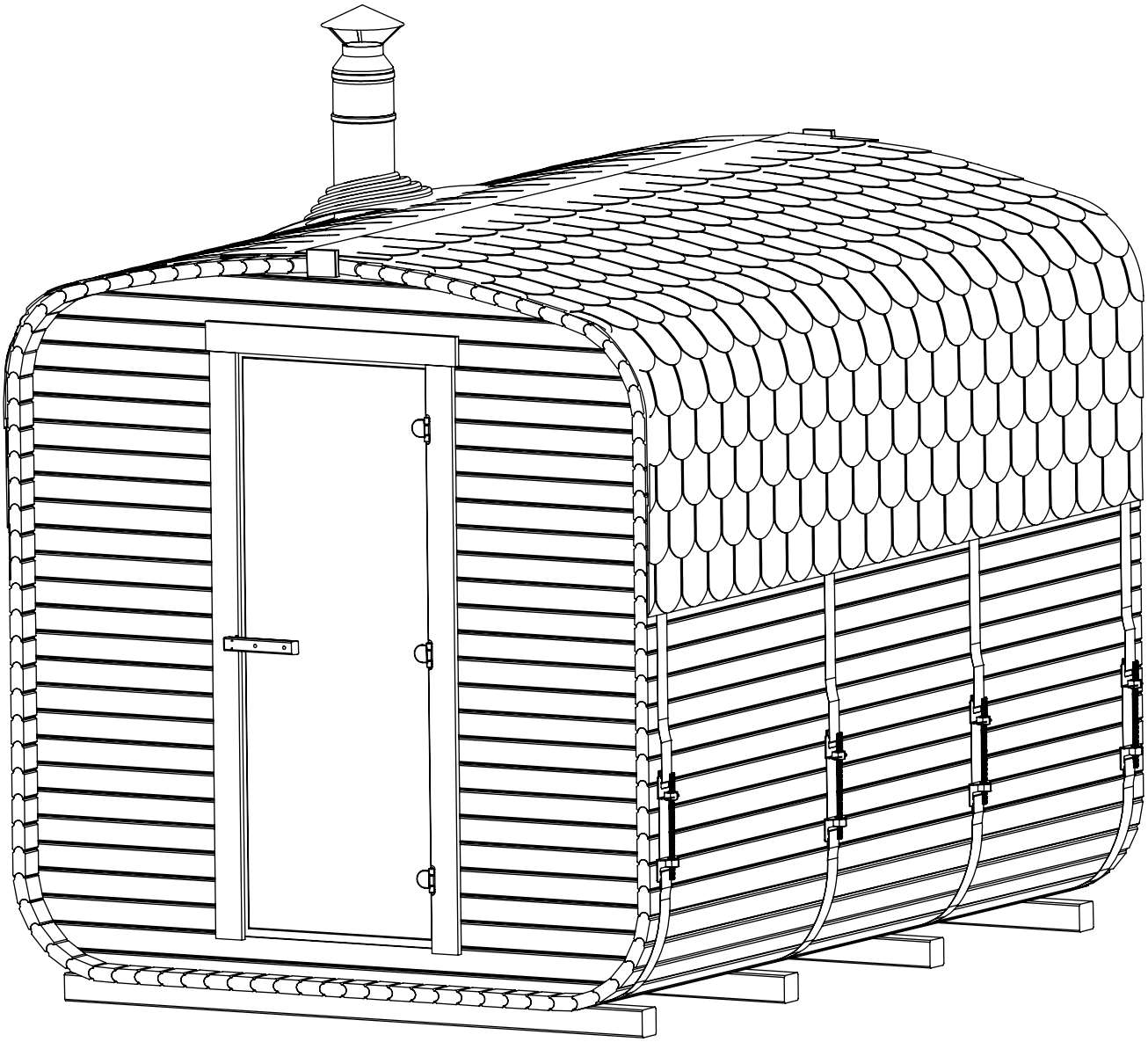

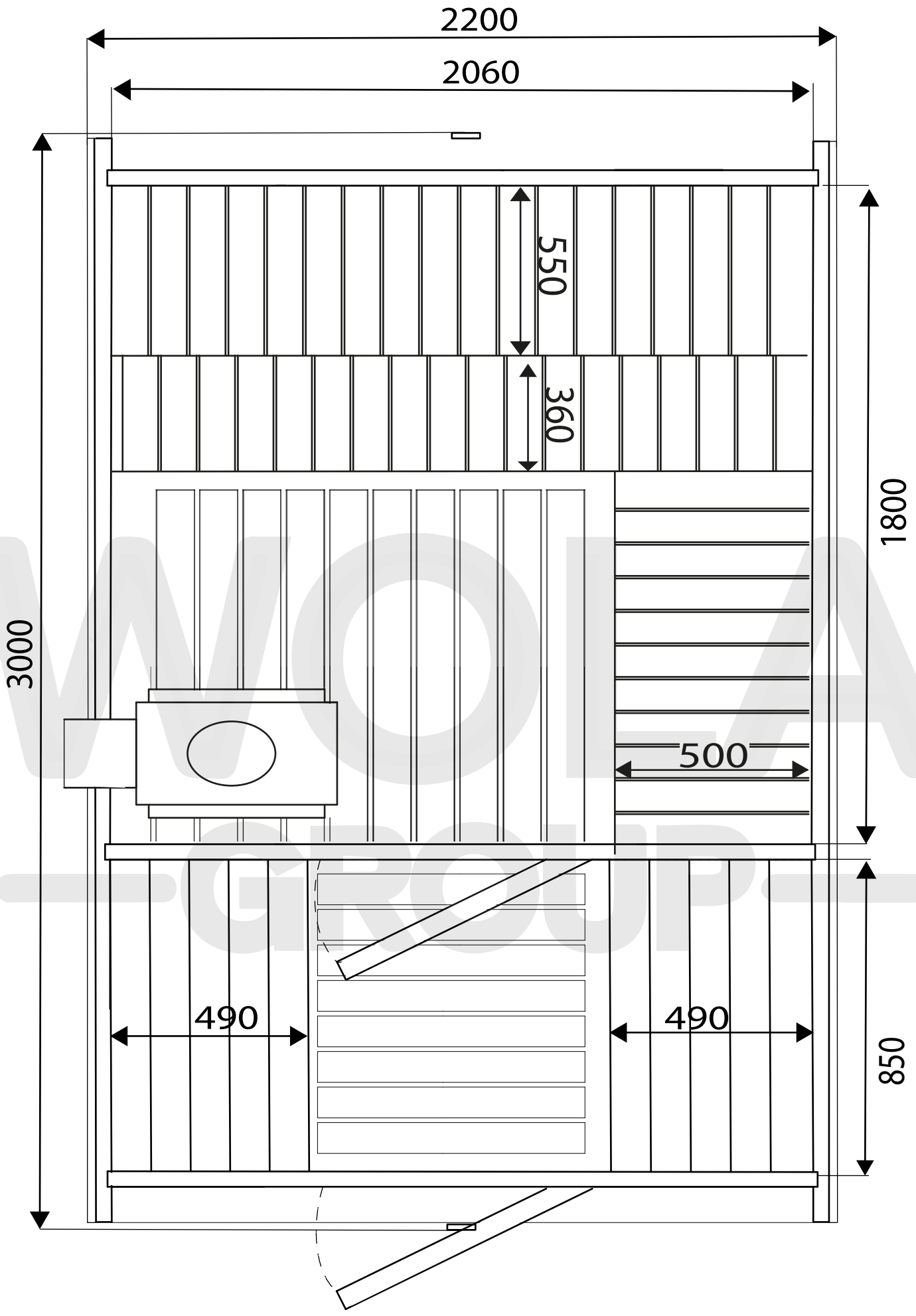
2200
2060
550
360
1800
3000
500
490
490
850

necessary tools

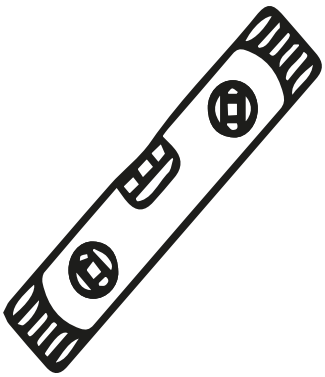

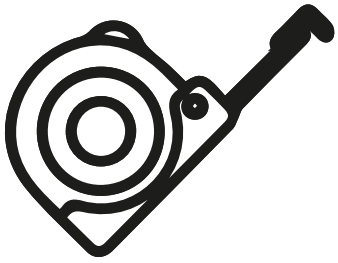

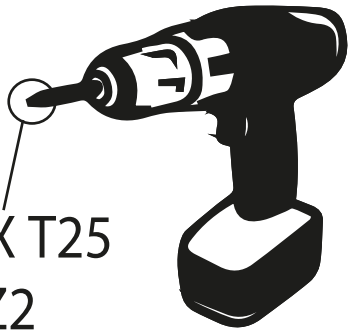

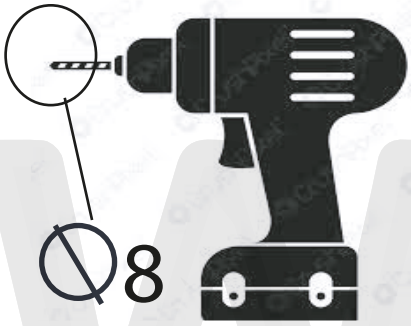







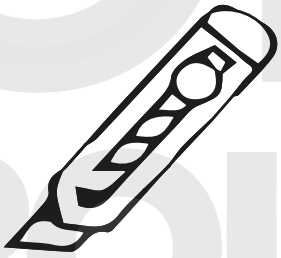

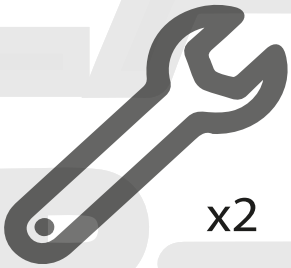



+



impregnation



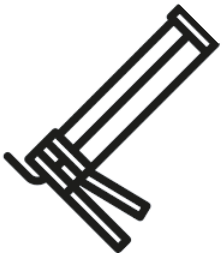

+



bituminous sealant



impregnating oil for benches

NOT INCLUDED!

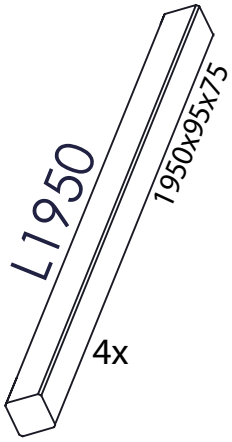
L1950
1950x95x75
4x

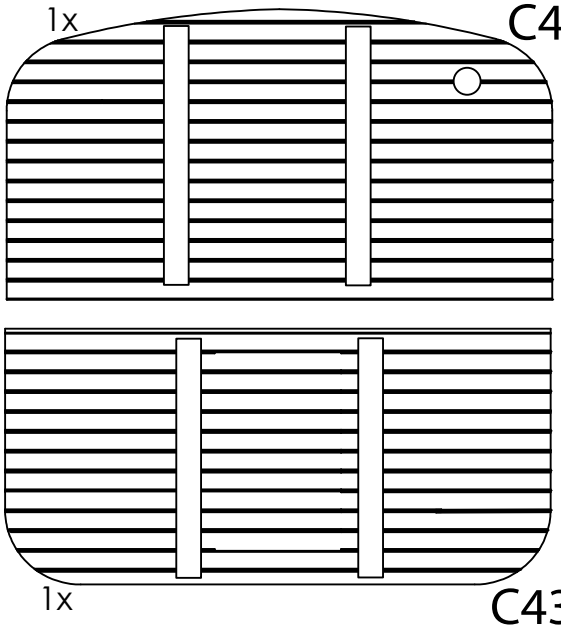
1x
C44
1x
C43

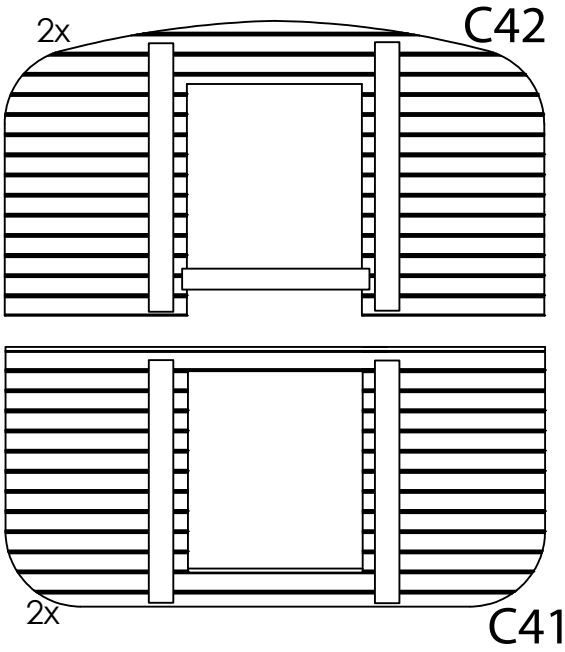
2x
C42
2x
C41

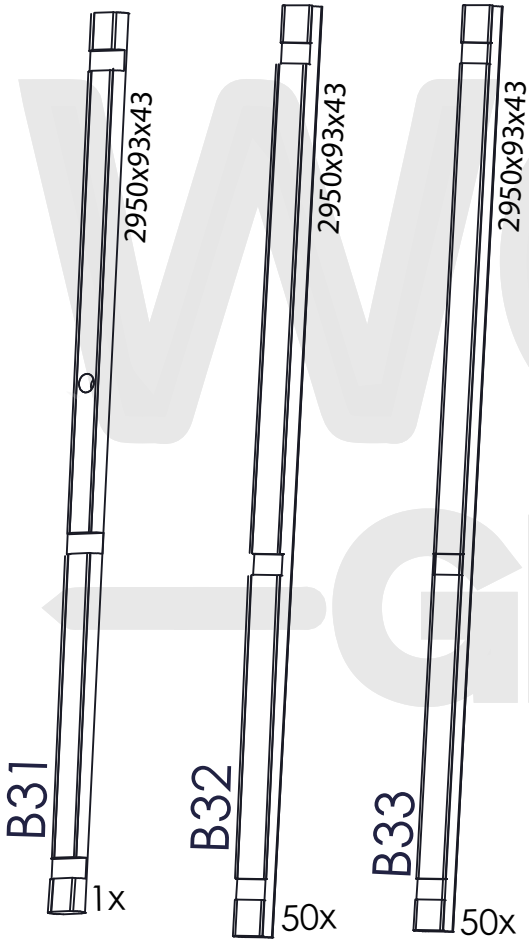
B31
2950x93x43
1x
B32
2950x93x43
50x
B33
2950x93x43
50x


WS
1500x45x20
4x

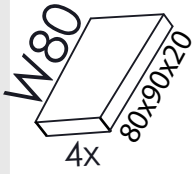
W80
80x90x20
4x

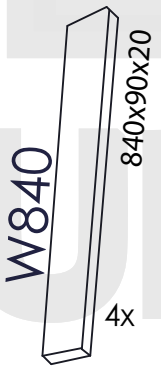
W840
840x90x20
4x


W850
850x90x20
11x

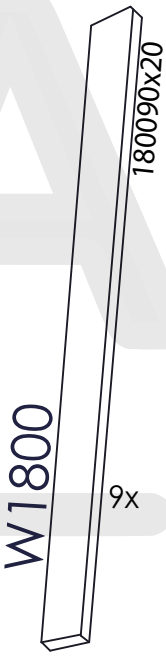
W1800
180090x20
9x

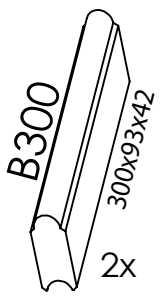
B300
300x93x42
2x

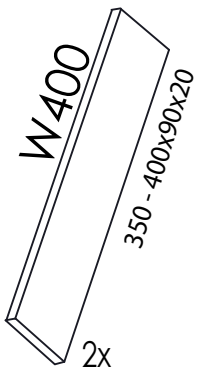
W400
350 - 400x90x20
2x

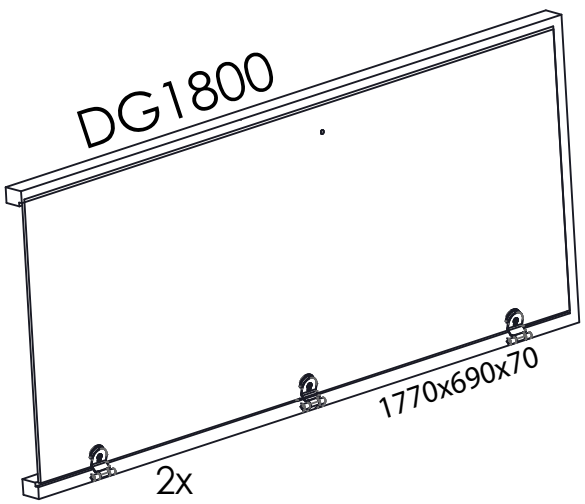
DG1800
1770x690x70
2x

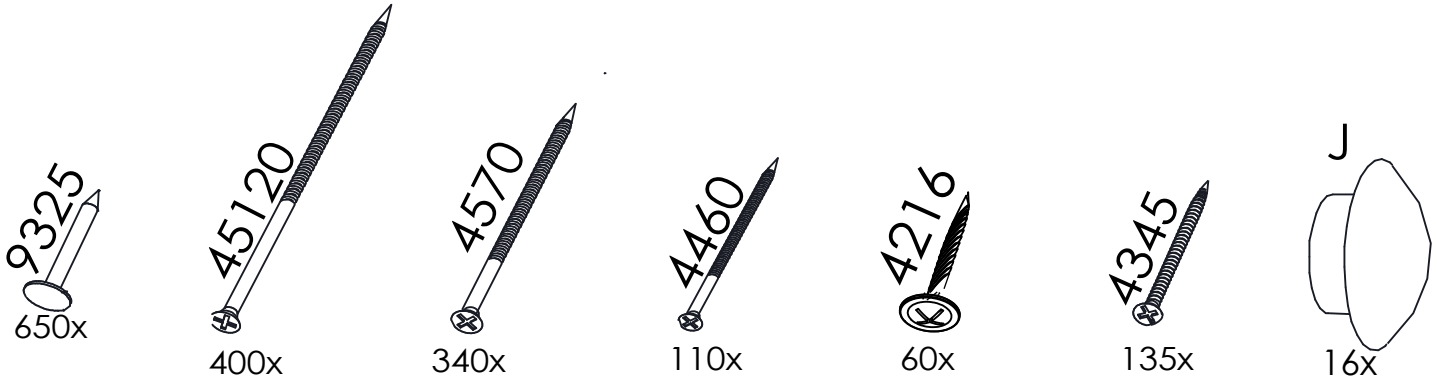
9325
650x
45120
400x
4570
340x
4460
110x
4216
60x
4345
135x
J
16x

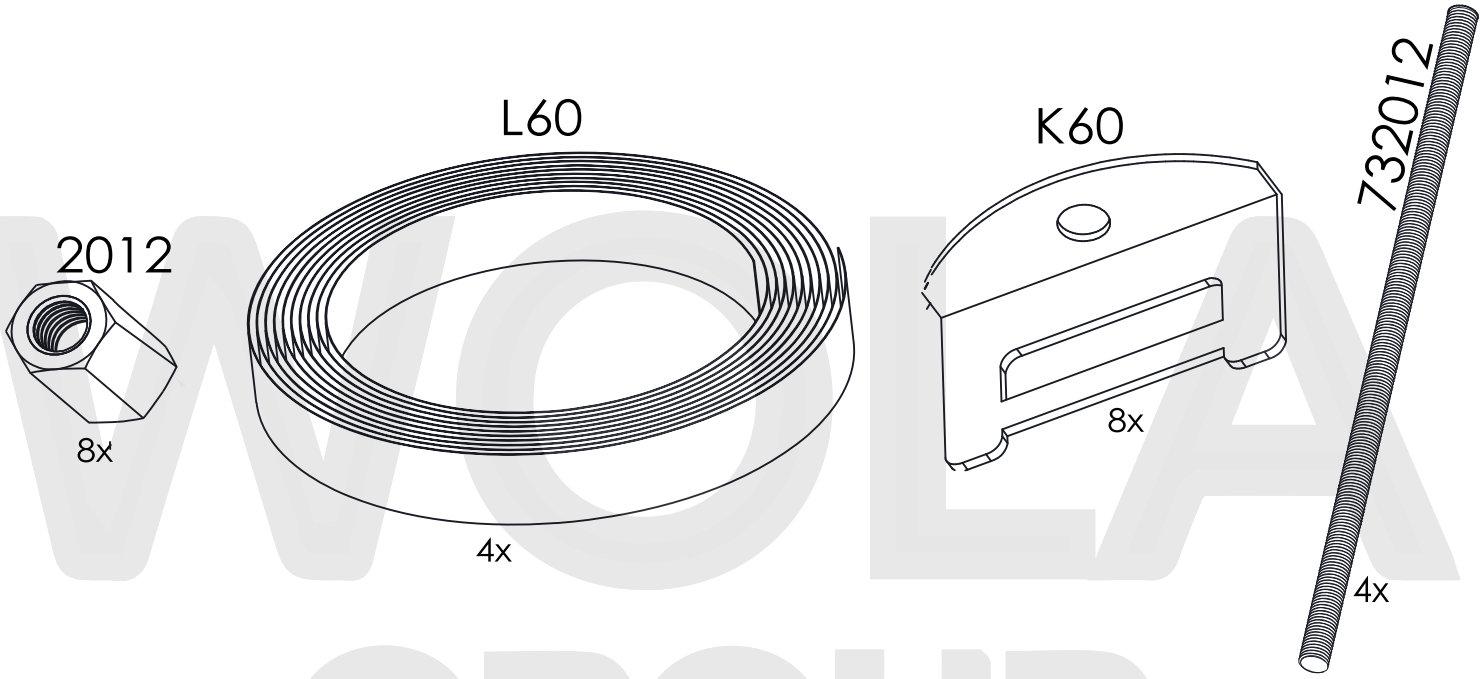
2012
8x
L60
4x
K60
8x
732012
4x

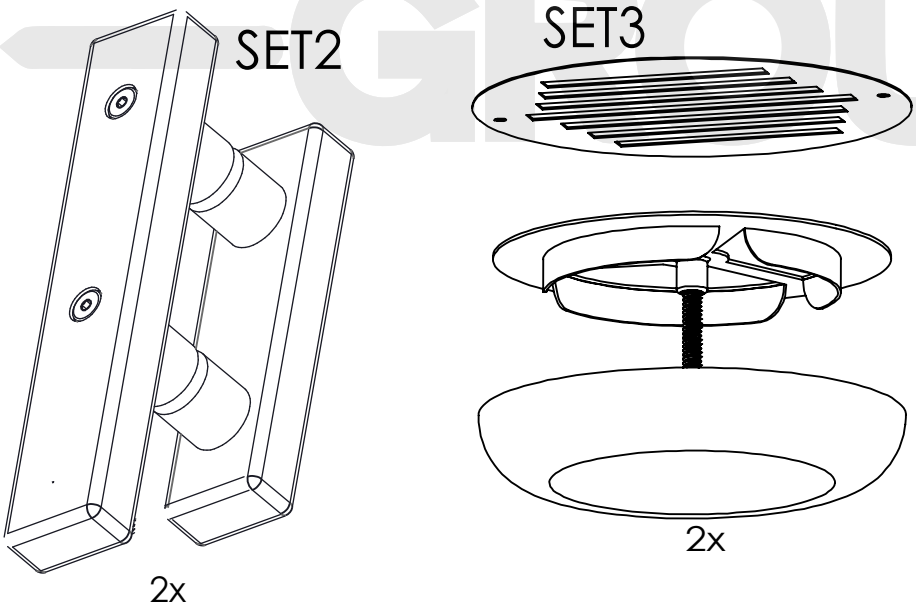
SET2
2x
SET3
2x

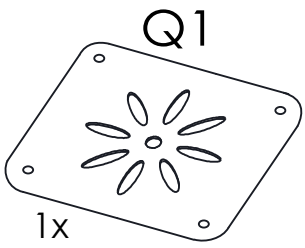
Q1
1x

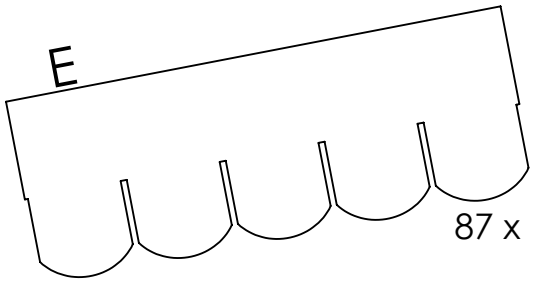
E
87 x

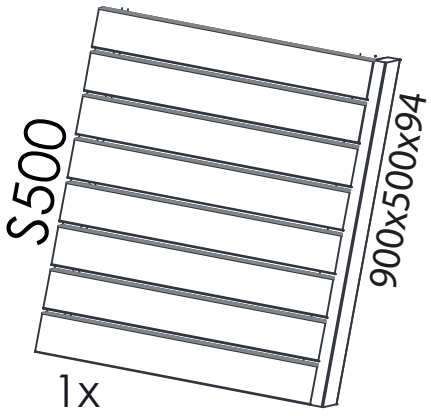
S500
900x500x94
1x

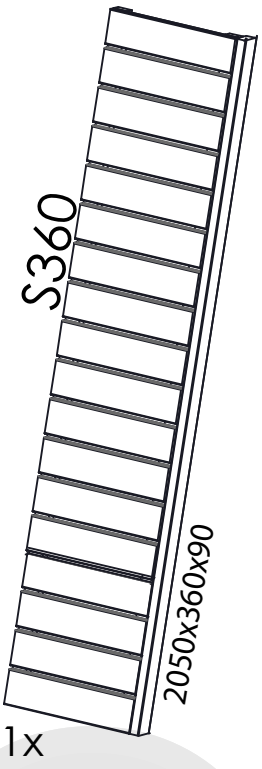
S360
2050x360x90
1x

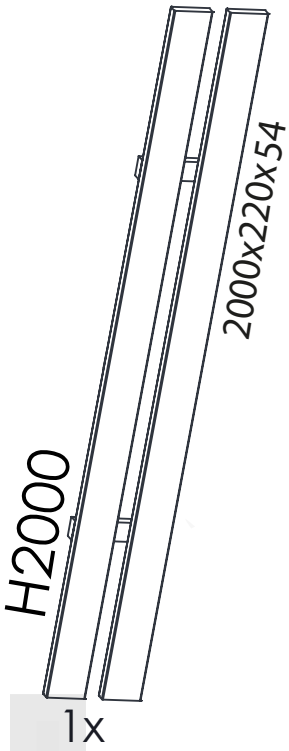
H2000
2000x220x54
1x

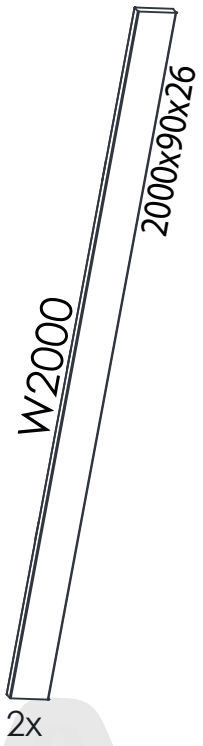
W2000
2000x90x26
2x

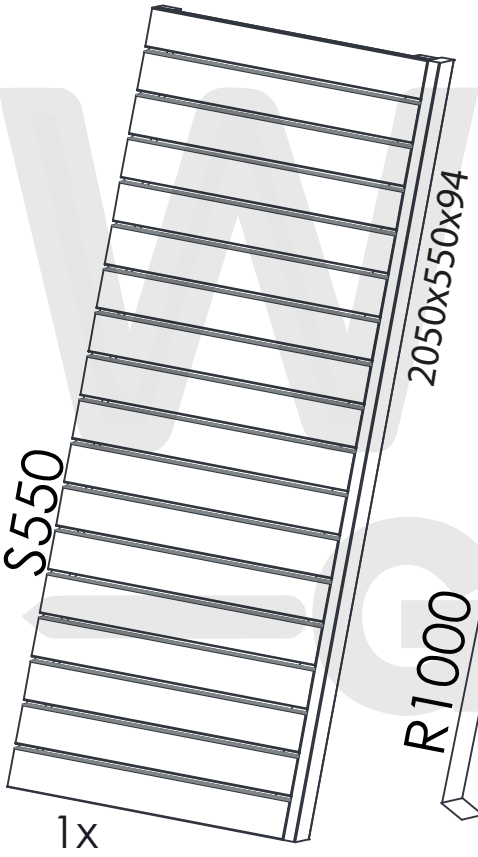
S550
2050x550x94
1x

R1000
1000x45x45
2x


R520
520x45x45
19x


R750
750x45x22
2x

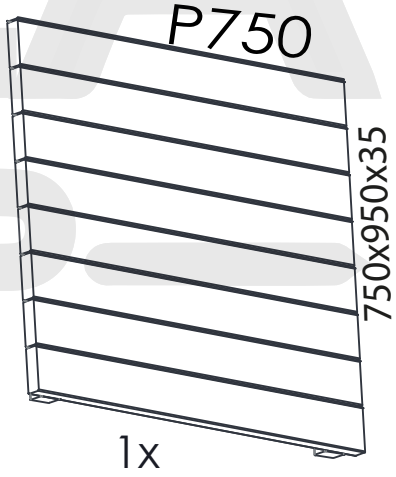
P750
750x950x35
1x

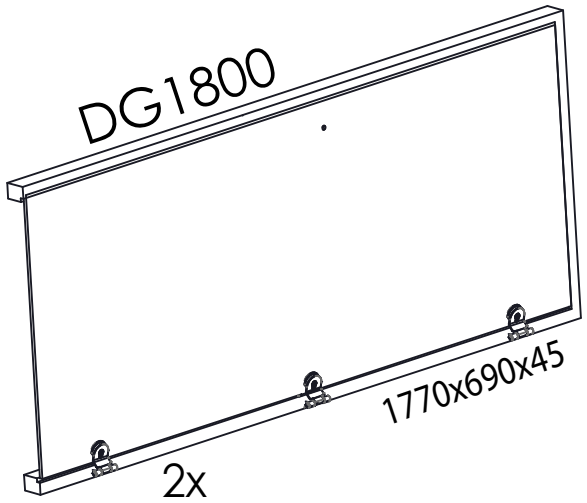
DG1800
1770x690x45
2x

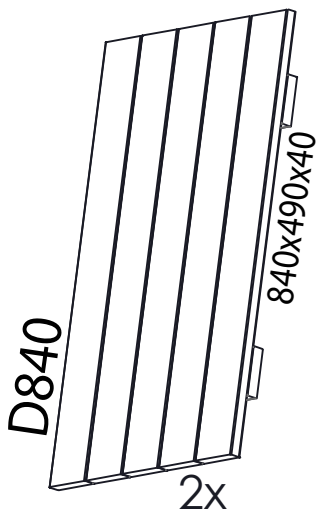
D840
840x490x40
2x

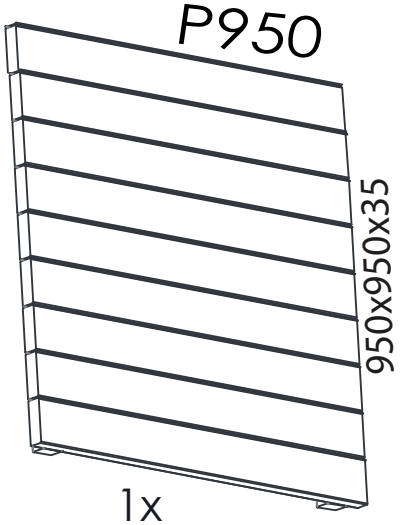
P950
950x950x35
1x

A PANORAMA INSTALATION SET (NOT INCLUDED)
PURCHASED SEPARATELY

for installation see **Appendix 2**

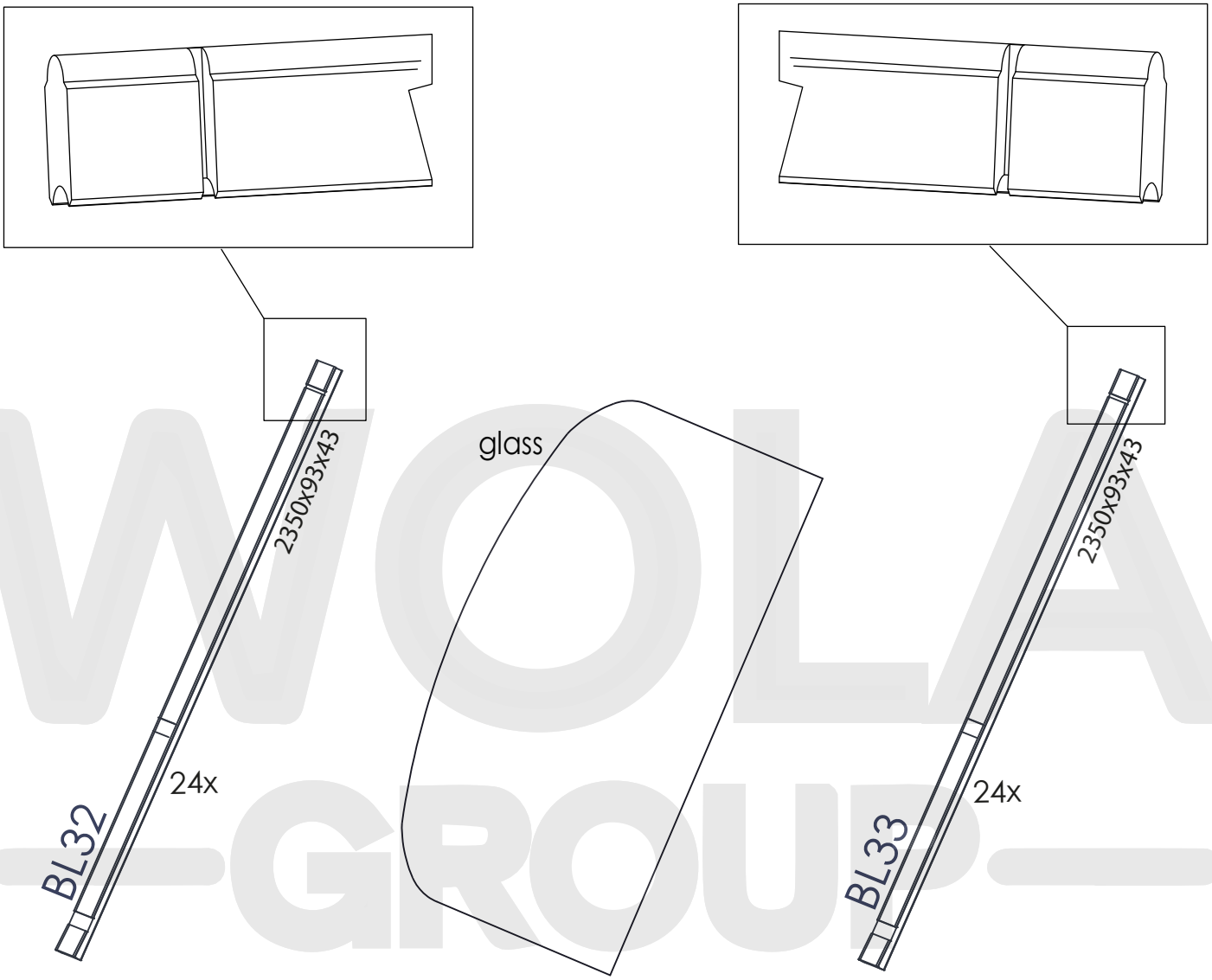

A STOVE INSTALATION SET (NOT INCLUDED)
PURCHASED SEPARATELY
for installation see **Appendix 3**

G12

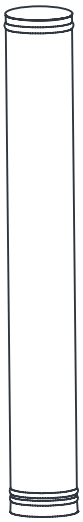

1x

G7

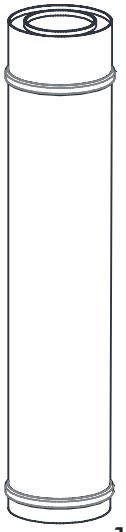

1x

G8

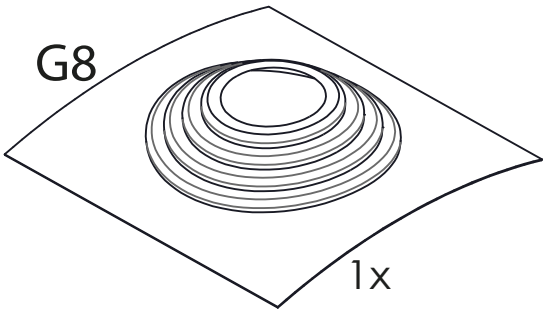

1x

G9

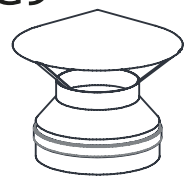

1x

G6

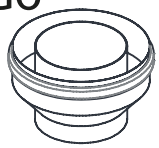

1x

Q2



1x

Q5



2x

Q4

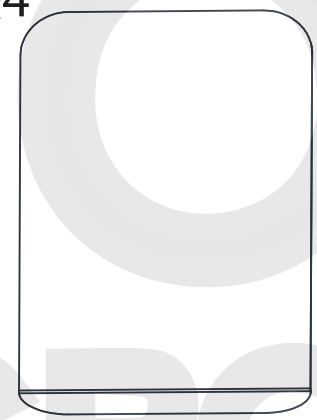

1x

ELECTRIC STOVE

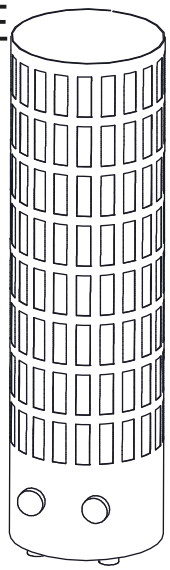

1x

G1

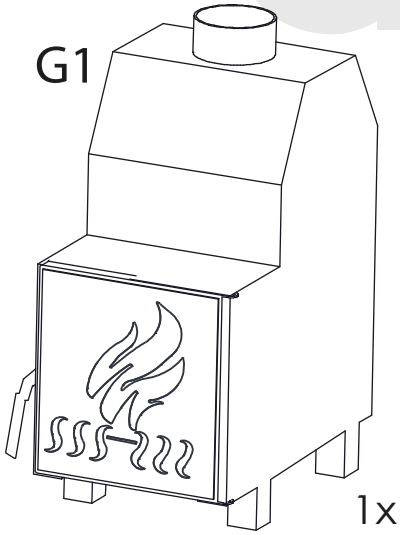

1x

G4

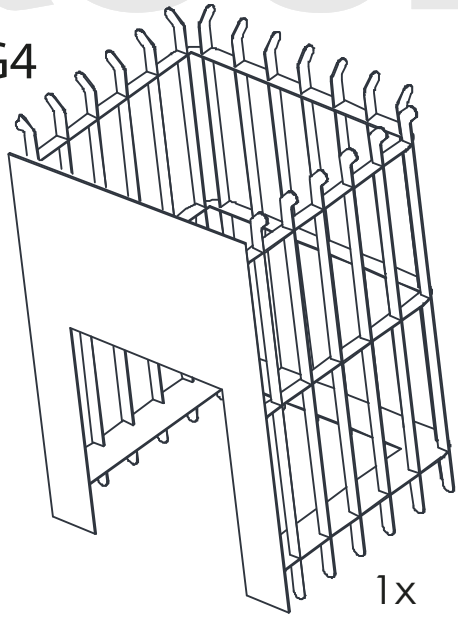

1x

G5

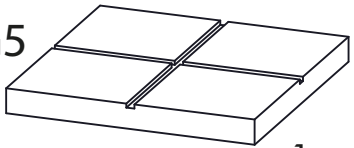

- for G1 only

1x

WOLA GROUP

L1950 - 4

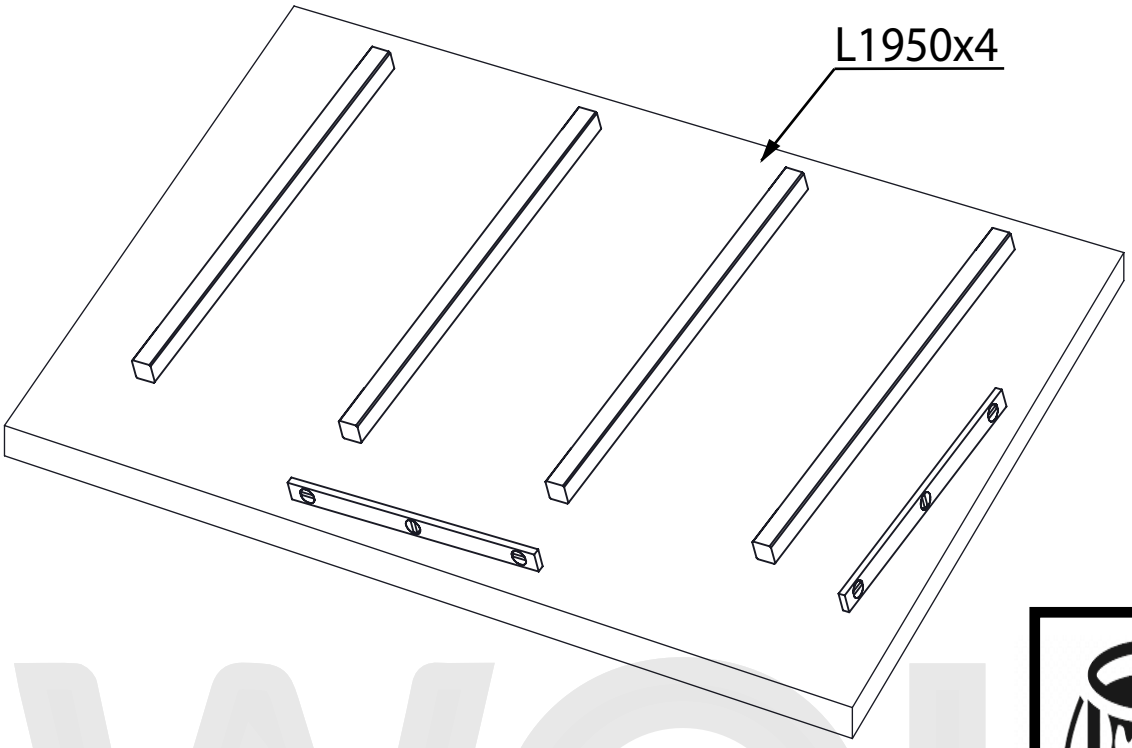

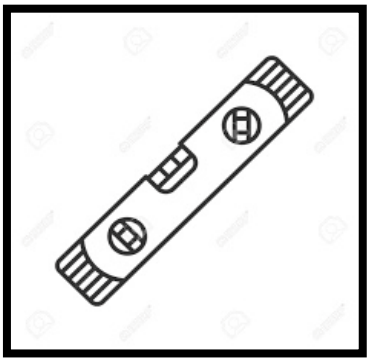

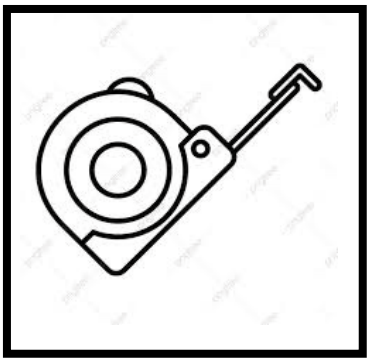

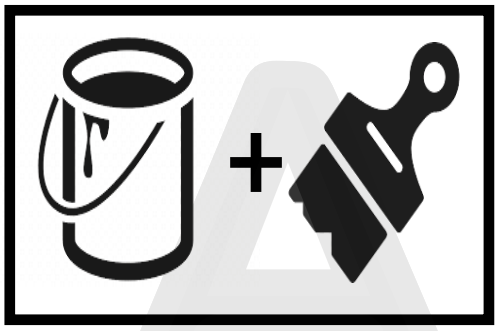

WOLA GROUP

ENTER

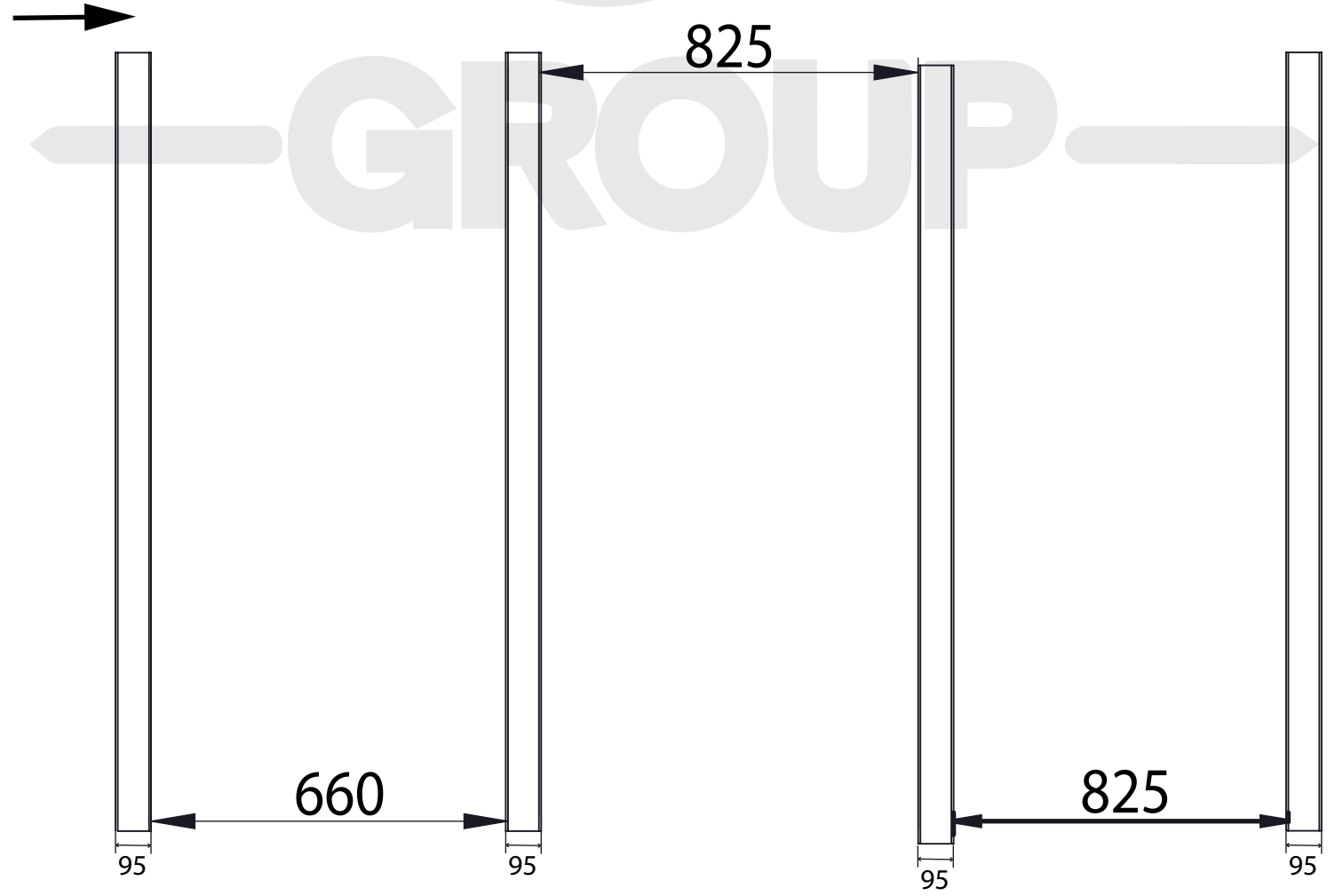

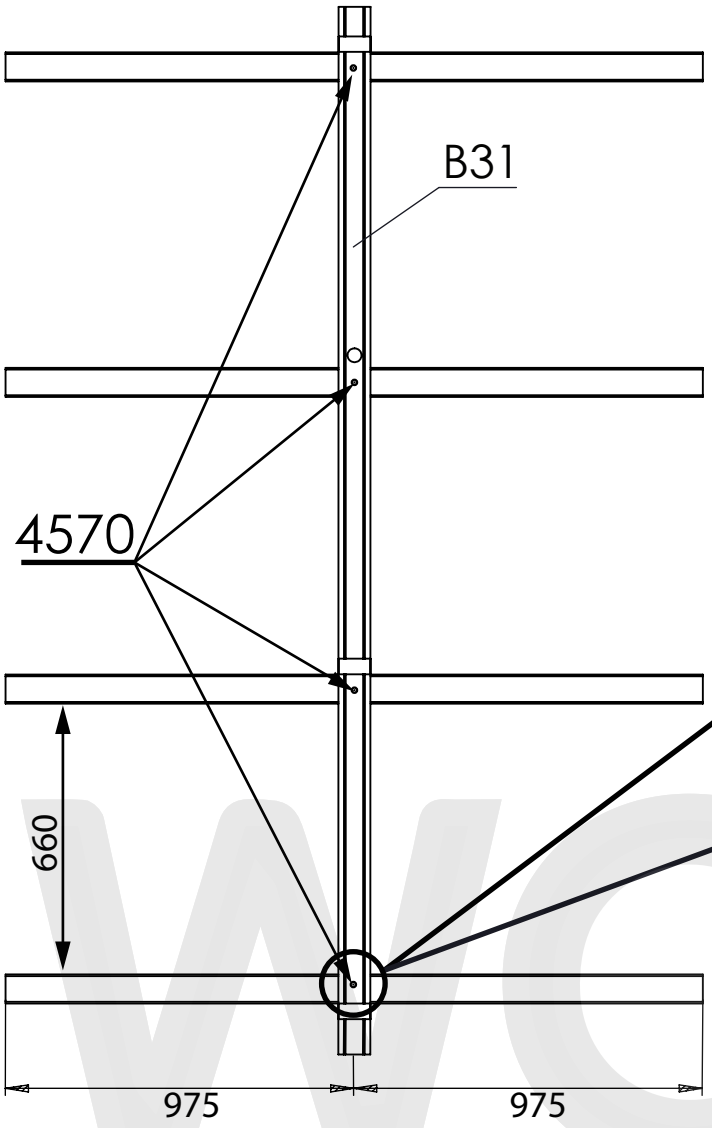

B31 - 1
B32 - 9
B33 - 9
4570 - 76
45120 - 90

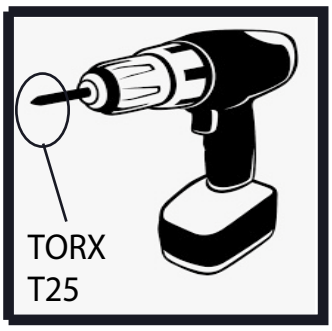

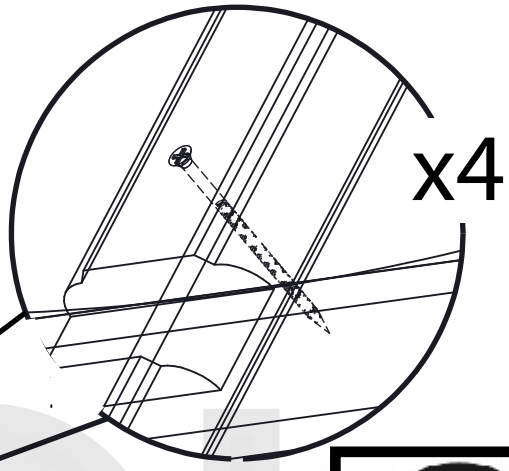





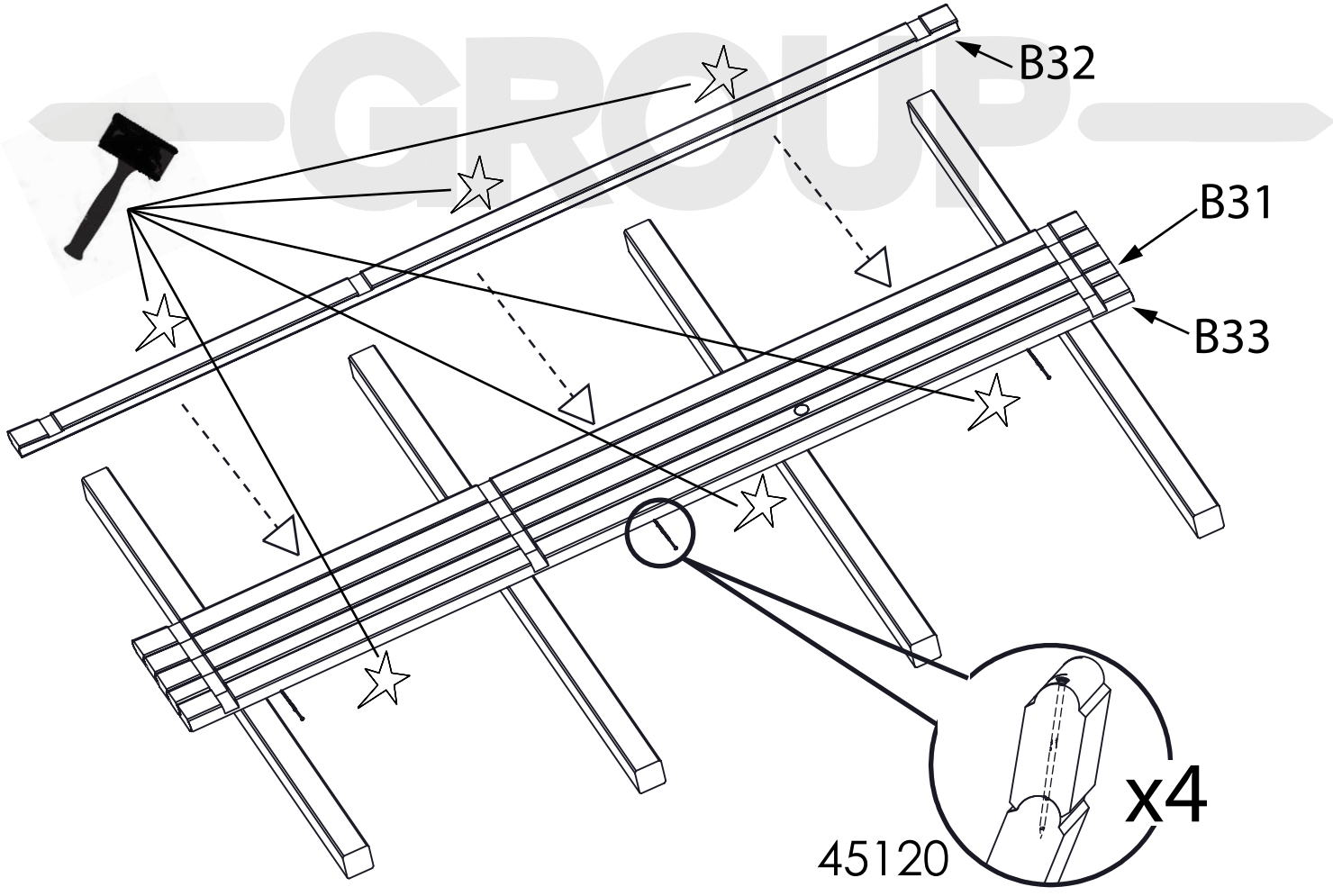



C41 - 2
C43 - 1
4570 - 6

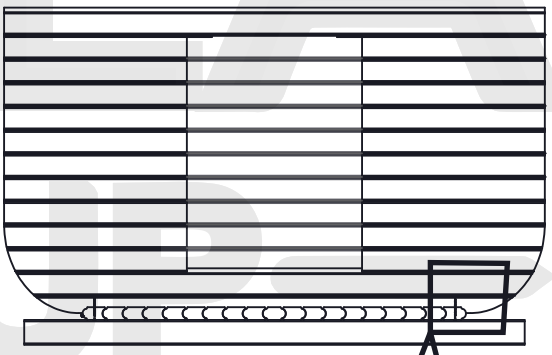

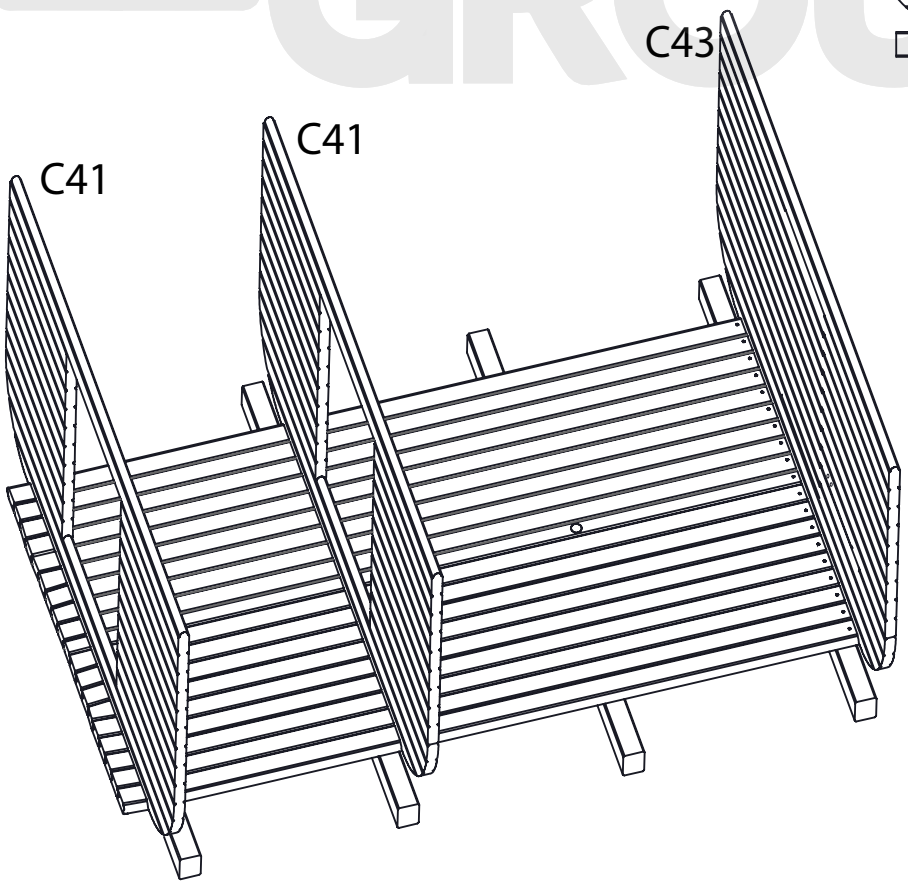

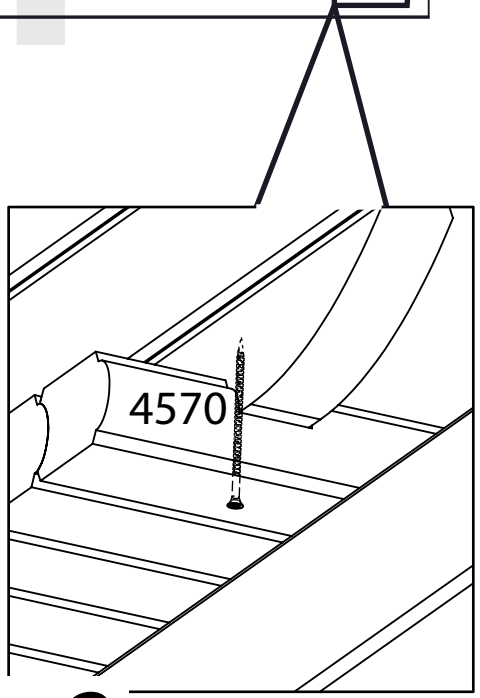

C42 - 2
C44 - 1
B32 - 14
B33 - 14
4570 - 90
45120 - 112

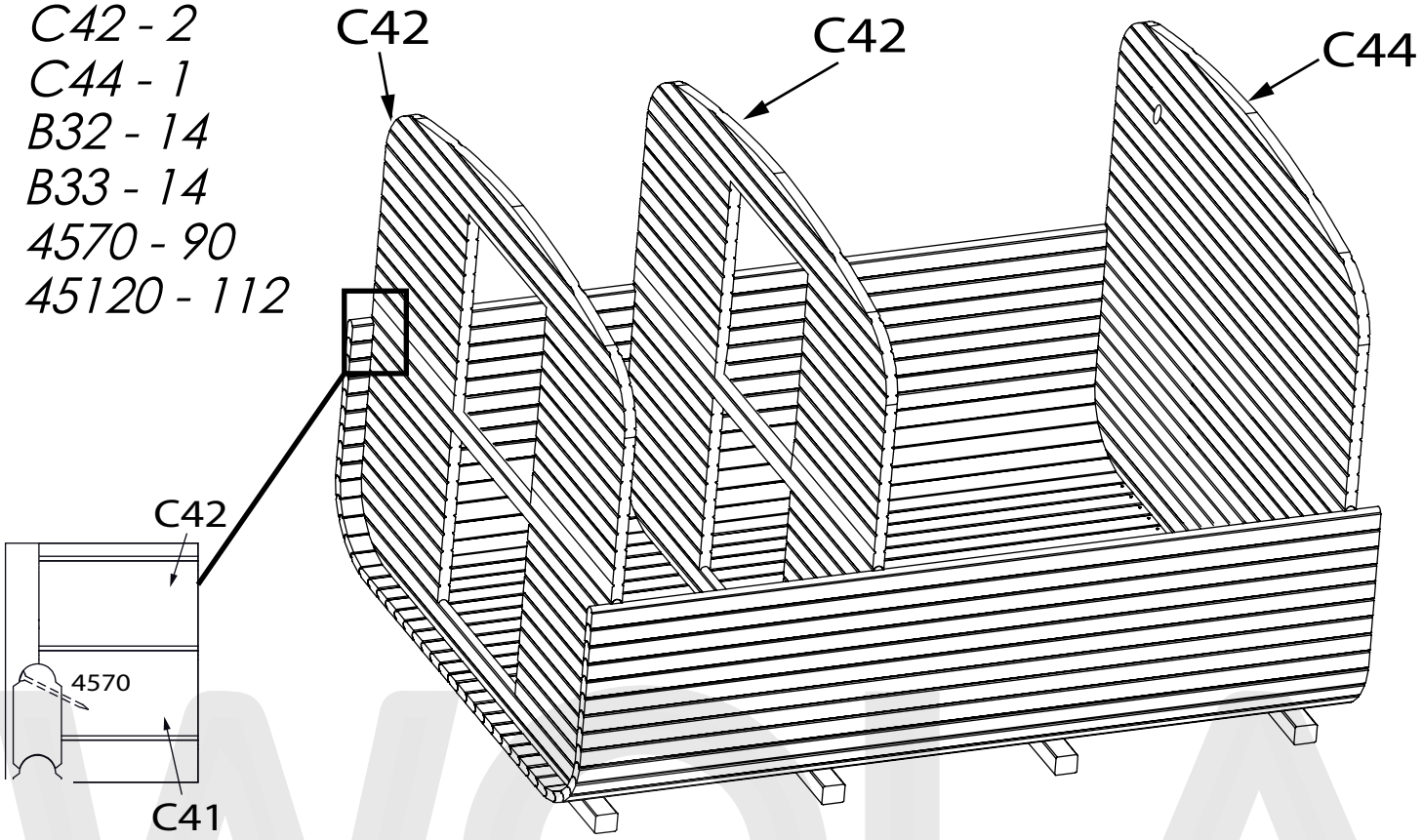

for panorama installing see **Appendix 2**

B32 - 25
B33 - 25
4570 - 150
45120 - 200

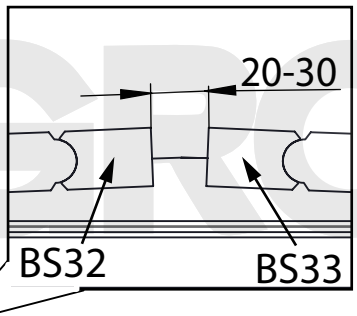



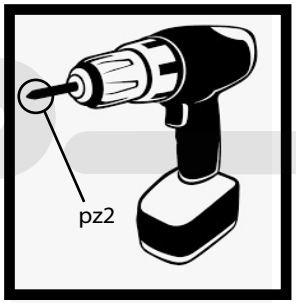

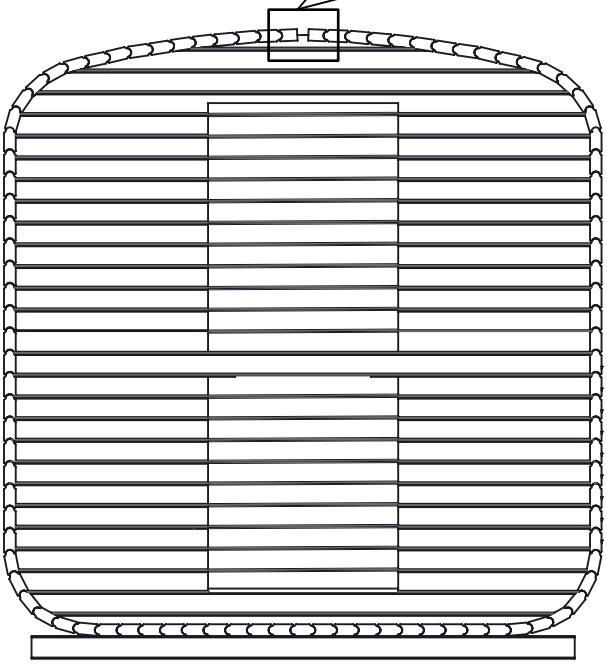

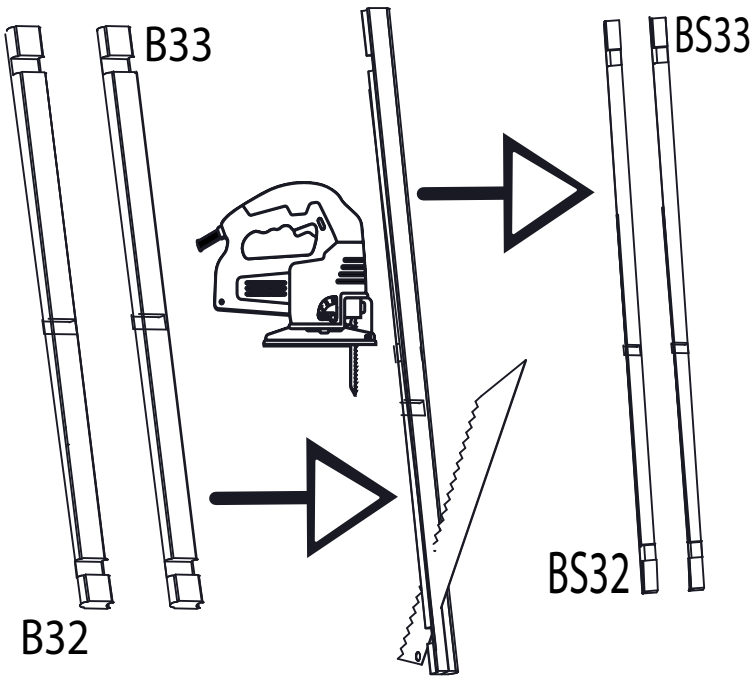

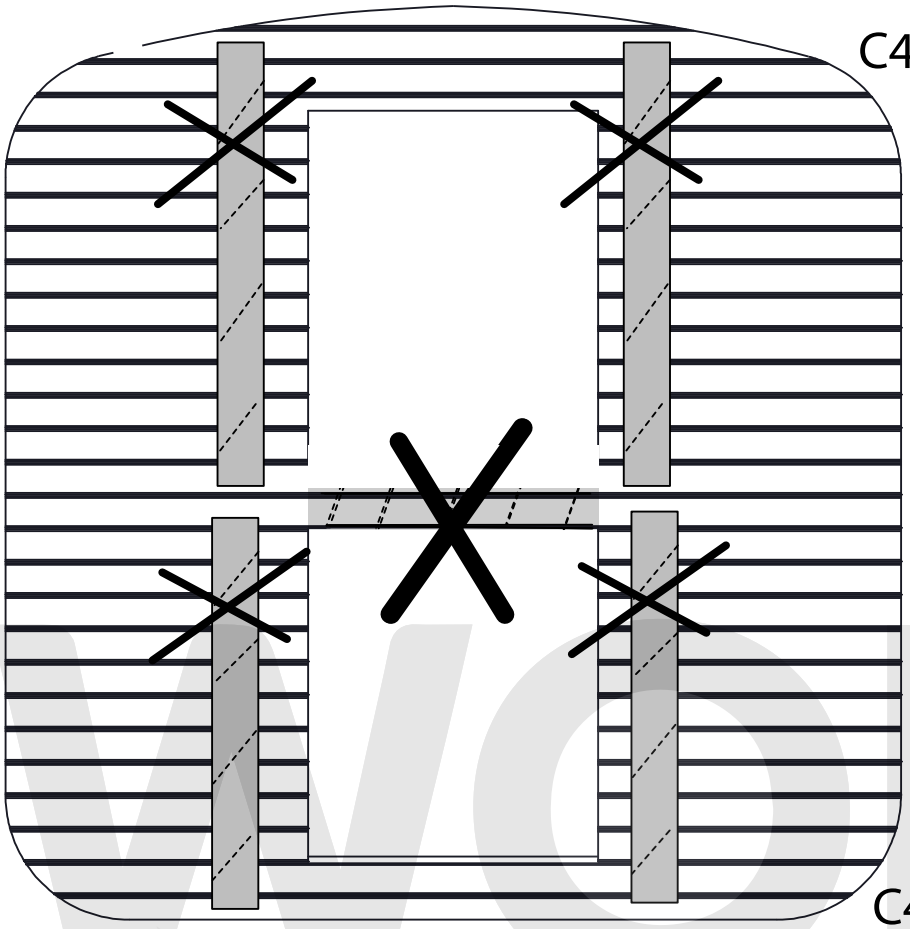

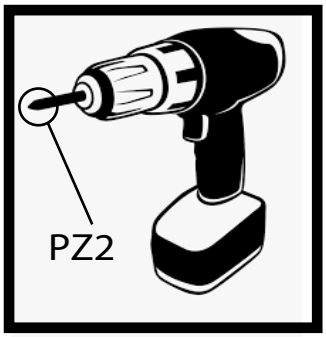



WOLA GROUP

Q1 - 1
4345 - 4

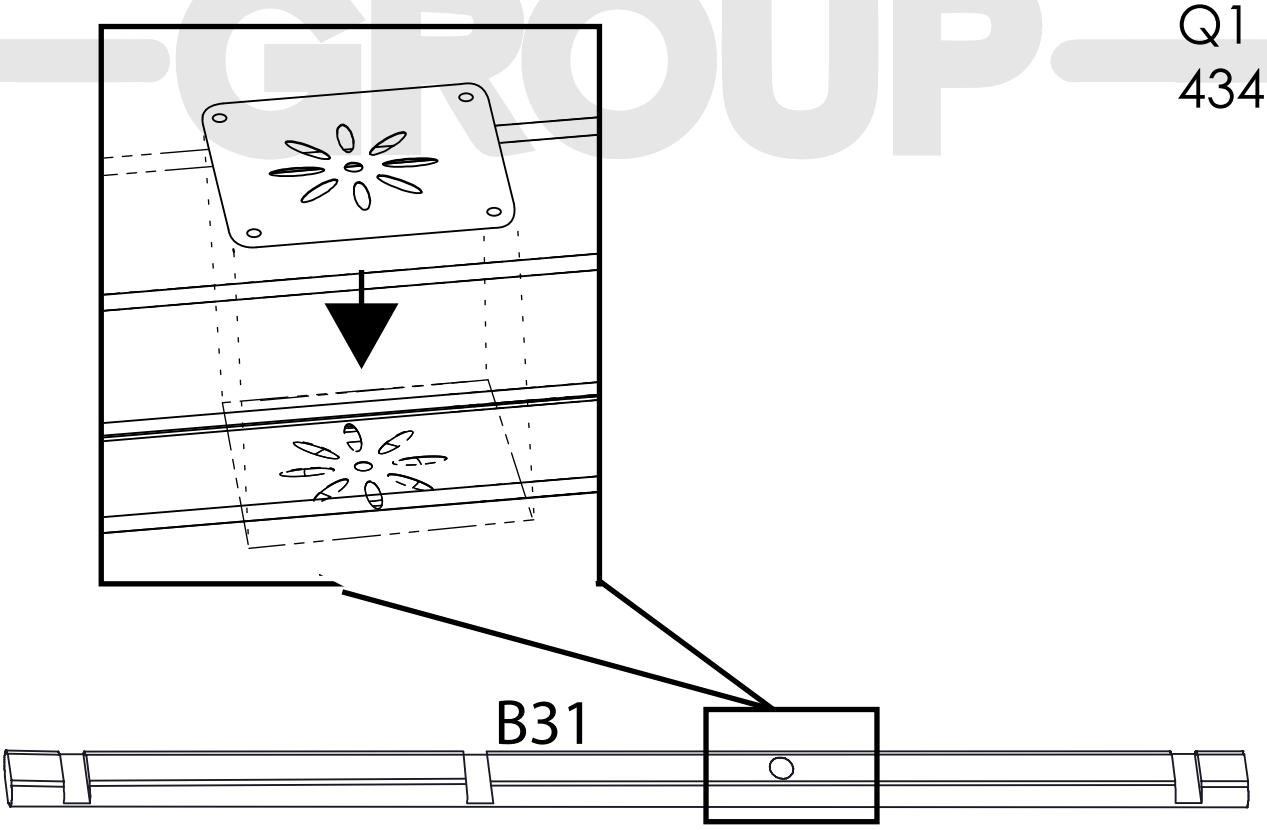

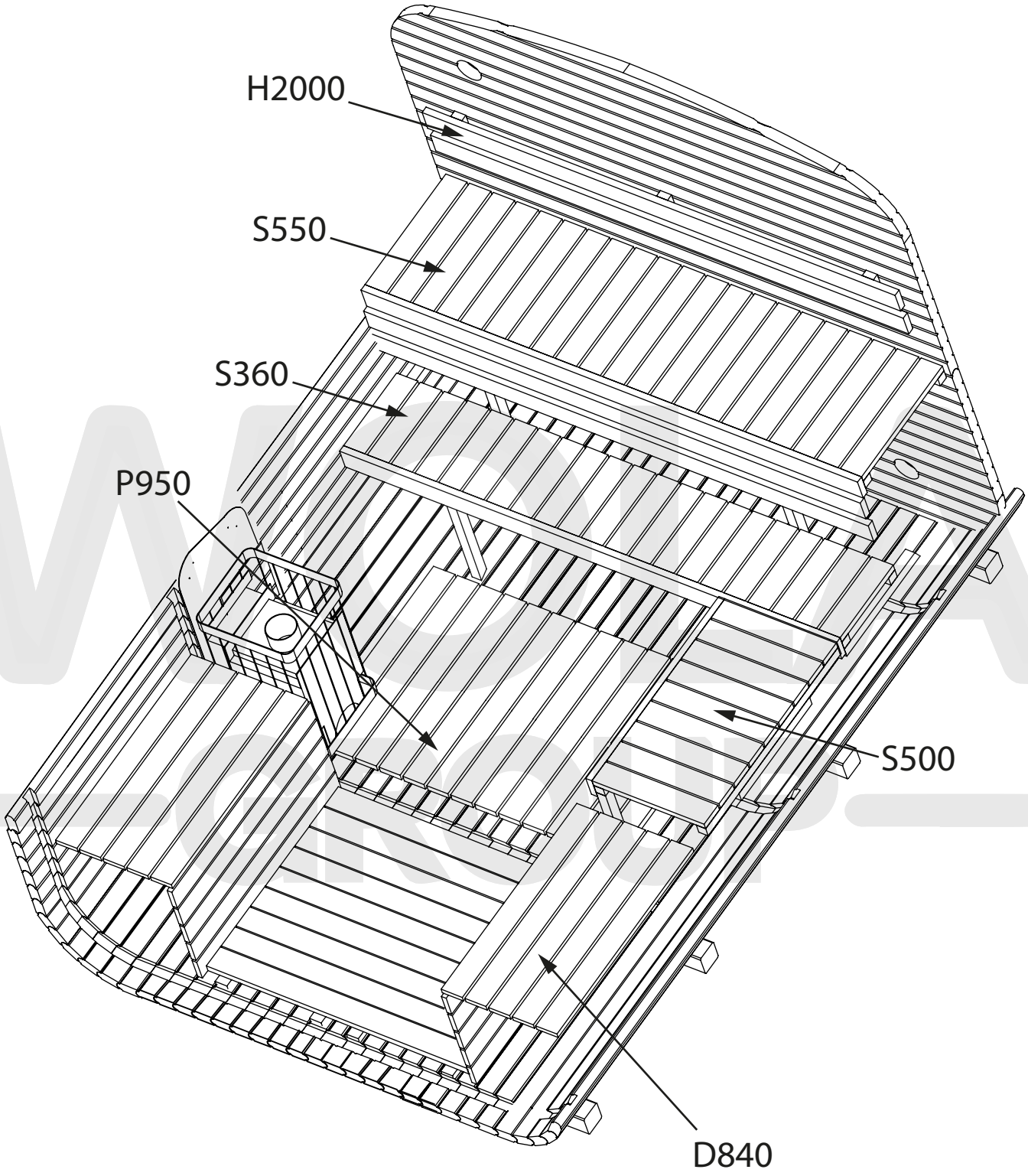
H2000
S550
S360
P950
S500
D840





SET3

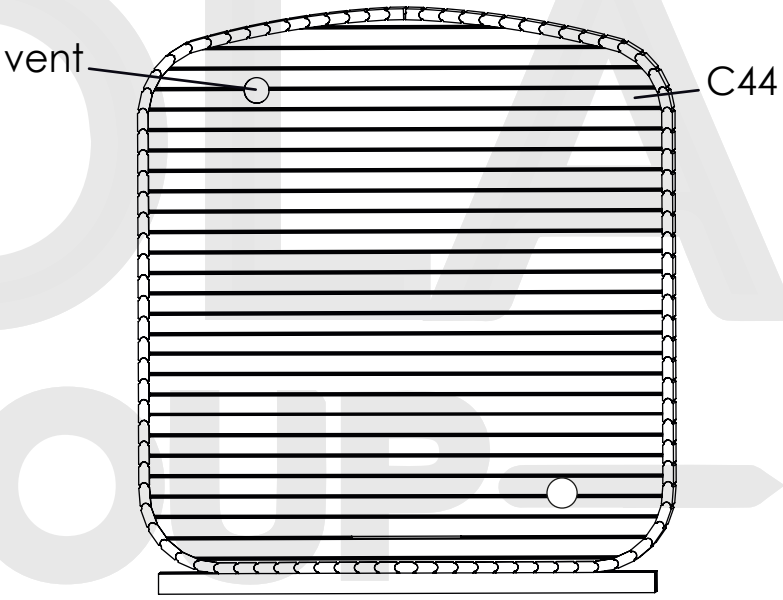

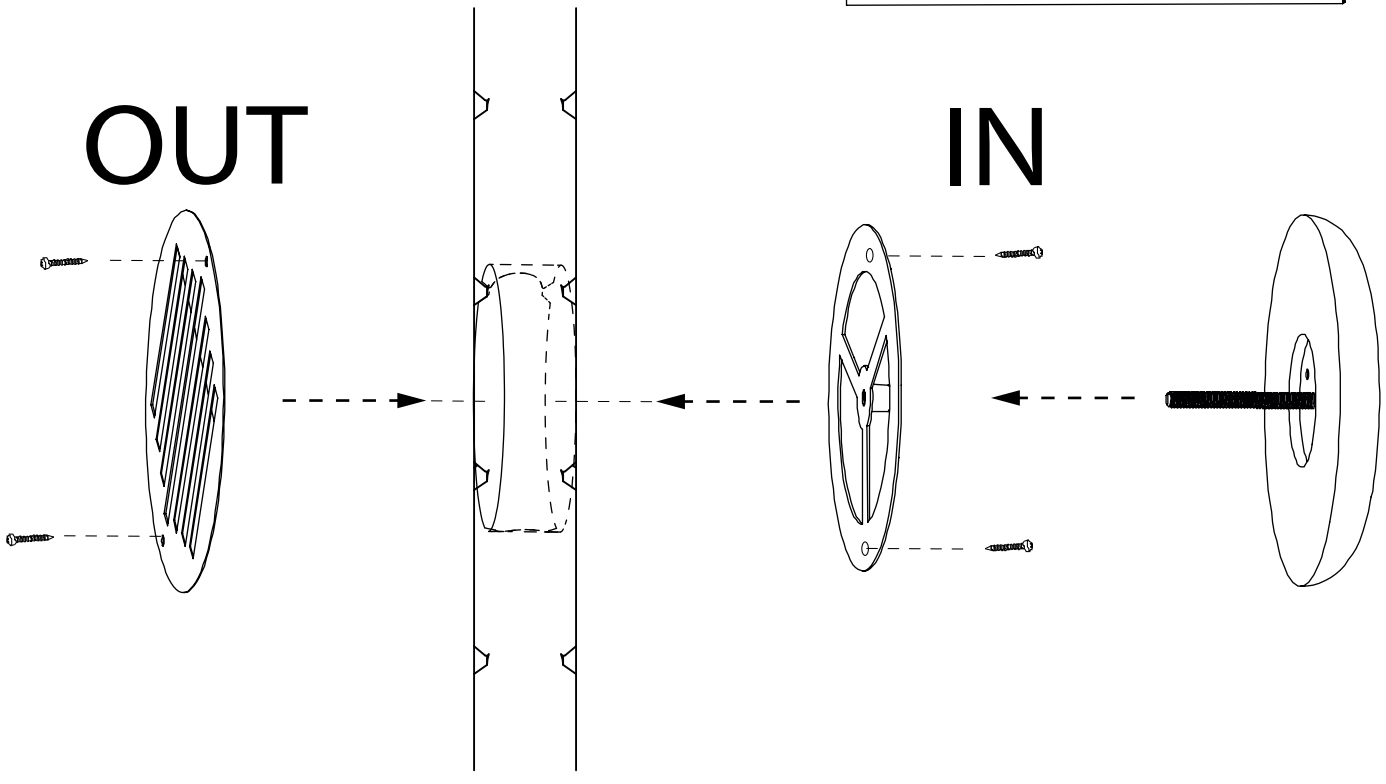

WOLA GROUP

D840 - 2
R750 - 2
R520 - 8
W850 - 10
80401 - 4
4570 - 68
4460 - 8
4216 - 16

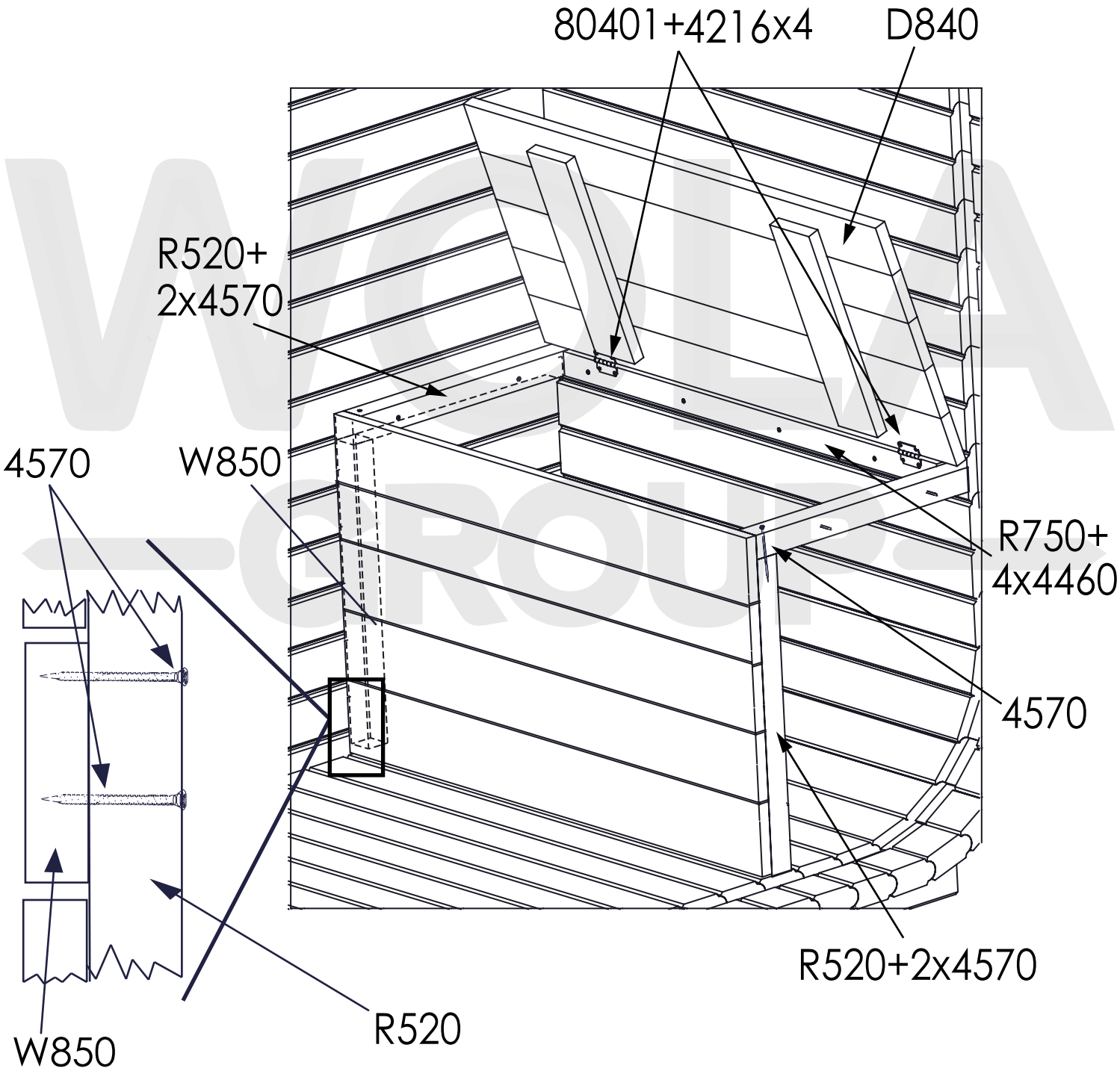

H2000 - 1
S550 - 1
R520 - 4
R1000 - 2
4570 - 16
4460 - 3

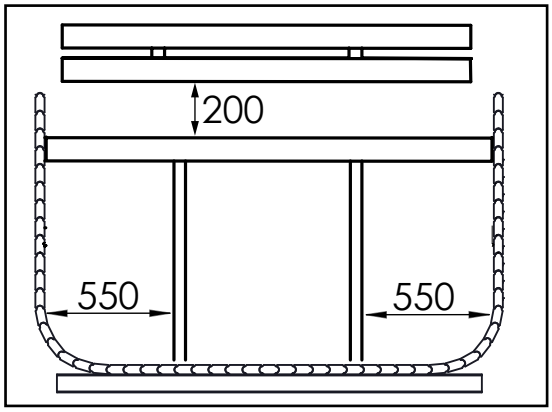

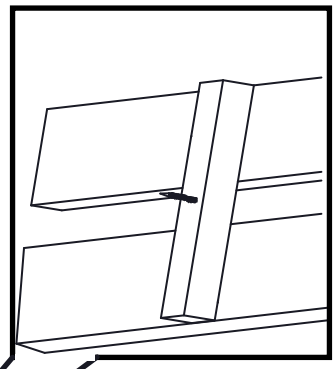

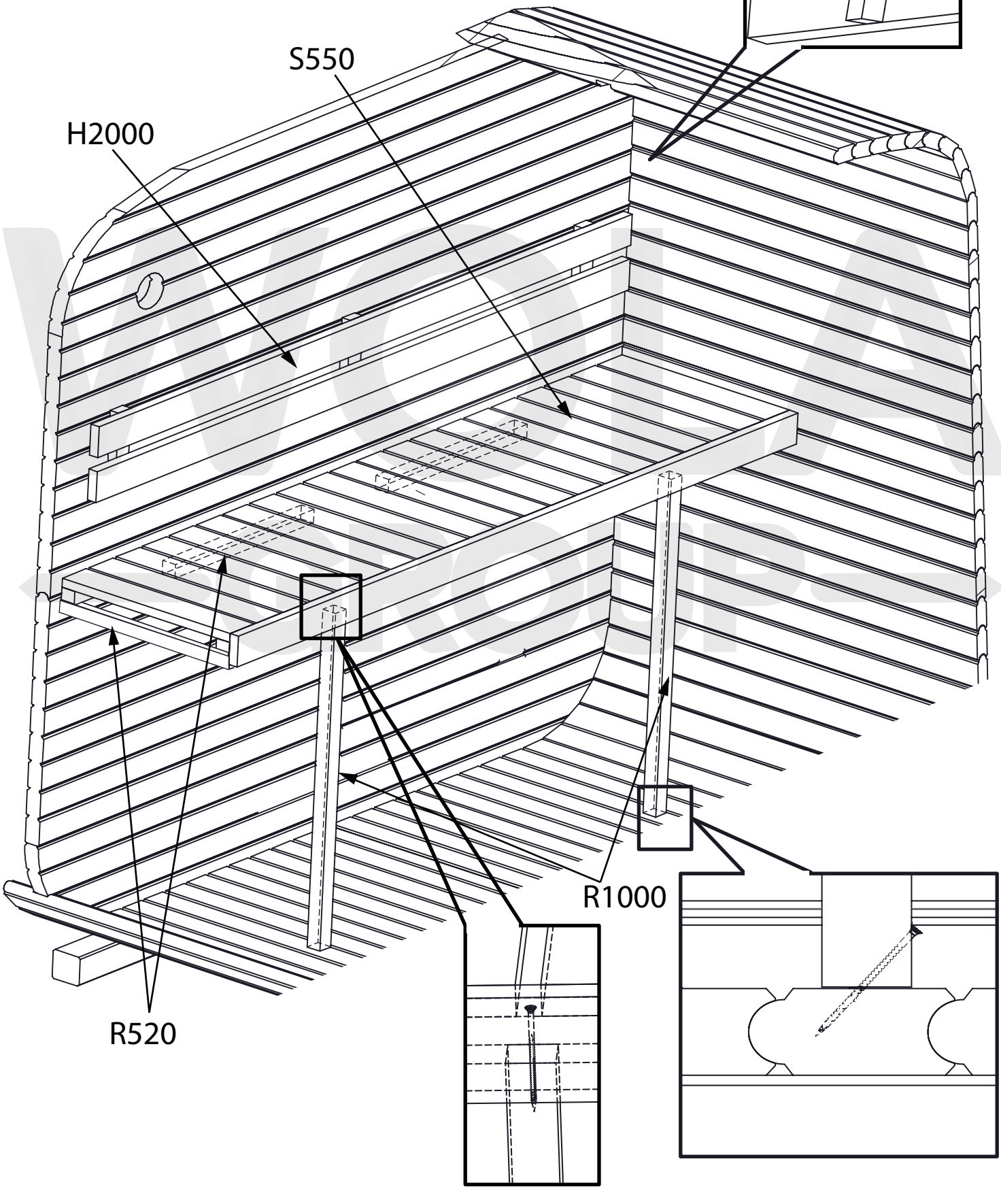

S360 - 1
W2000 - 2
R520 - 6
4570 - 24

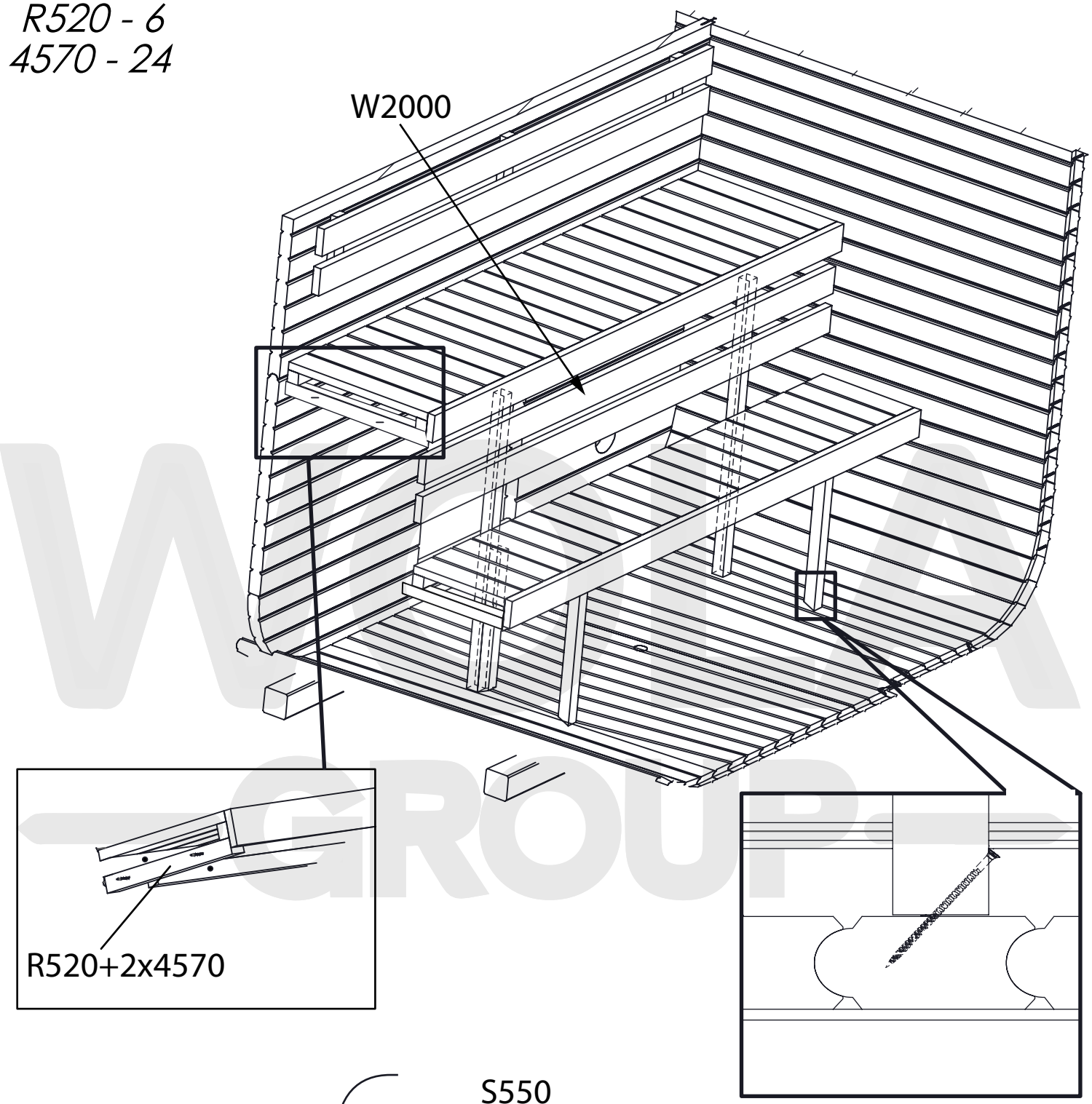

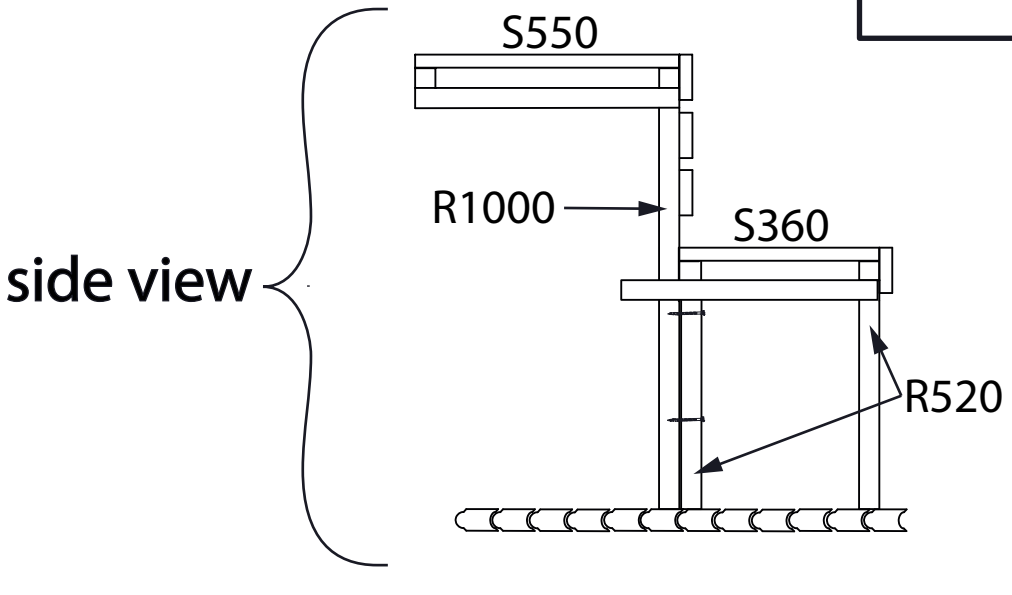

side view

S500 - 1
R520 - 5
4570 - 16



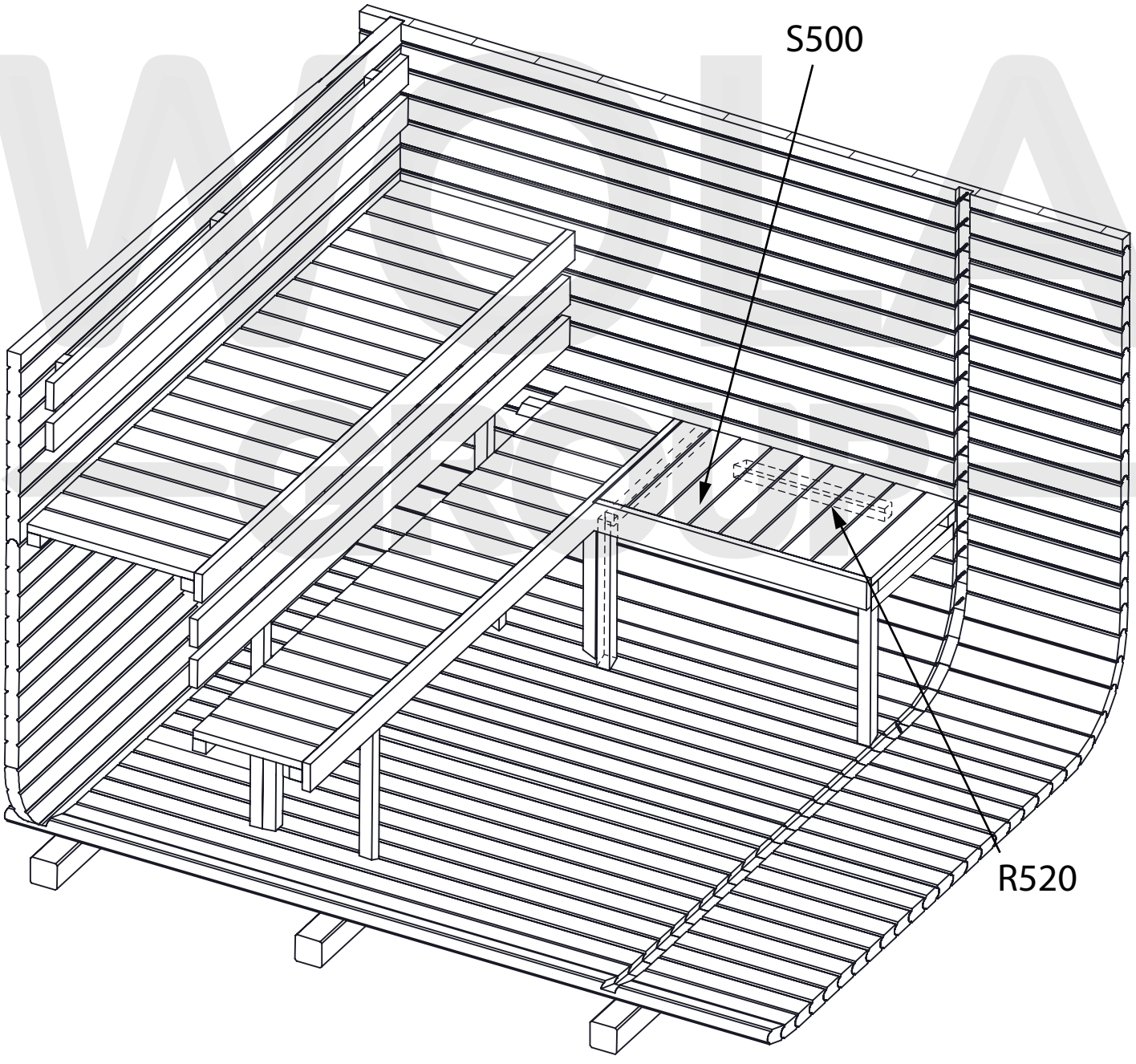

W850 - 1
W1800 -1
W80 - 4
4345 - 22

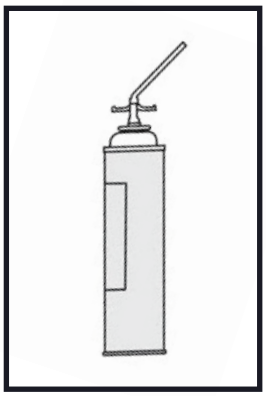

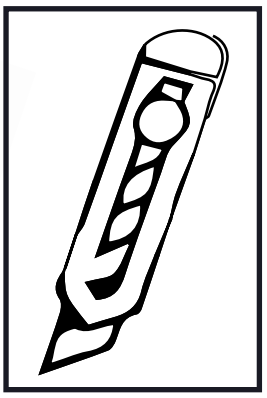

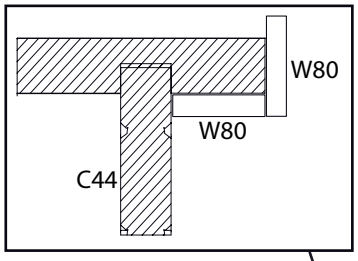

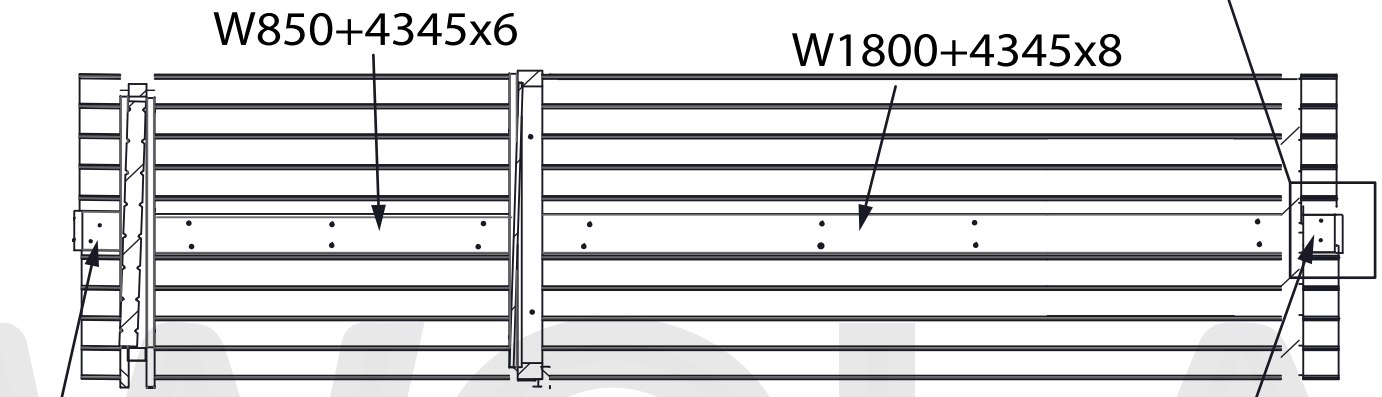

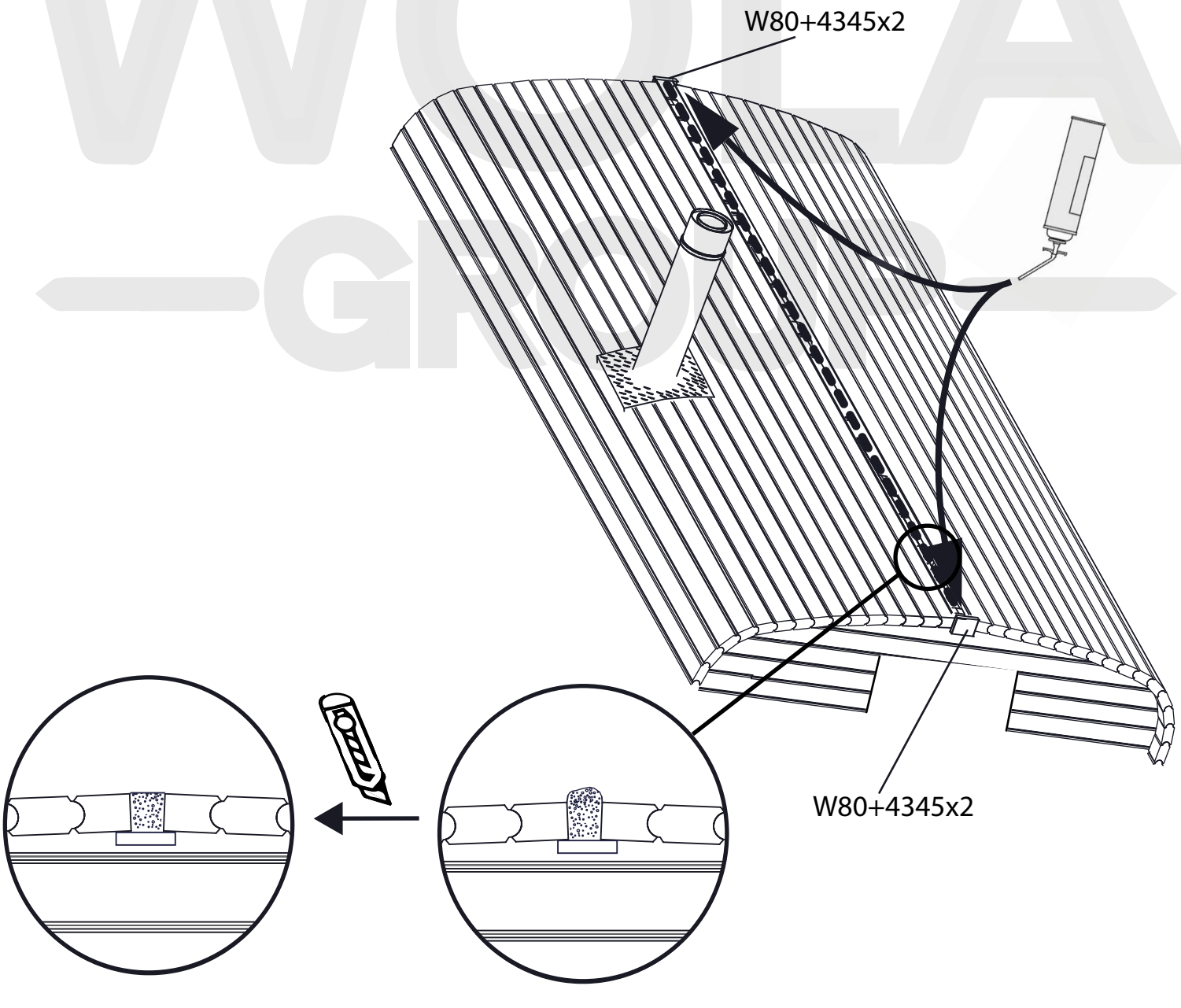

L60 - 4
K60 - 8
2012 - 8
732012 - 4





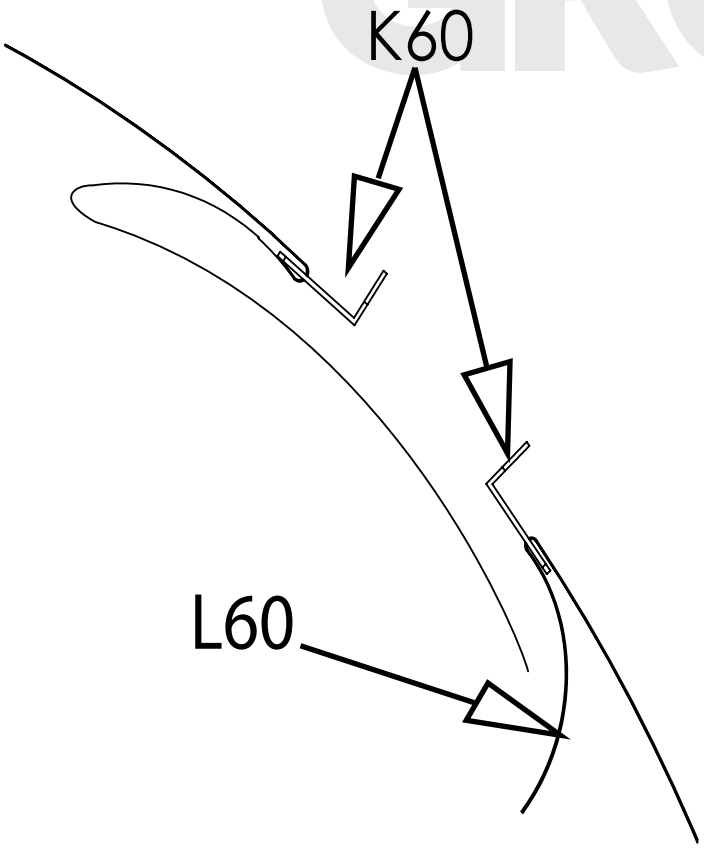

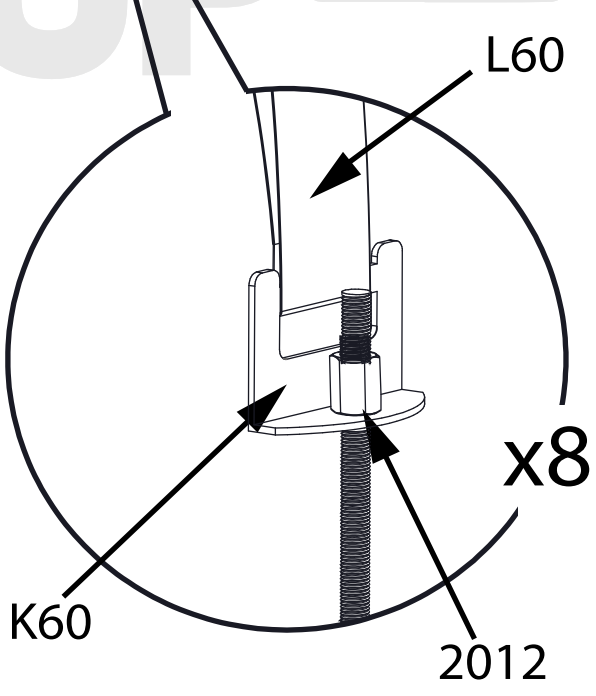

DG1800 - 1
4570 - 8
J - 8

DOOR INSTALATION
outside view

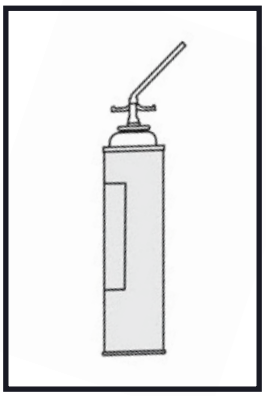

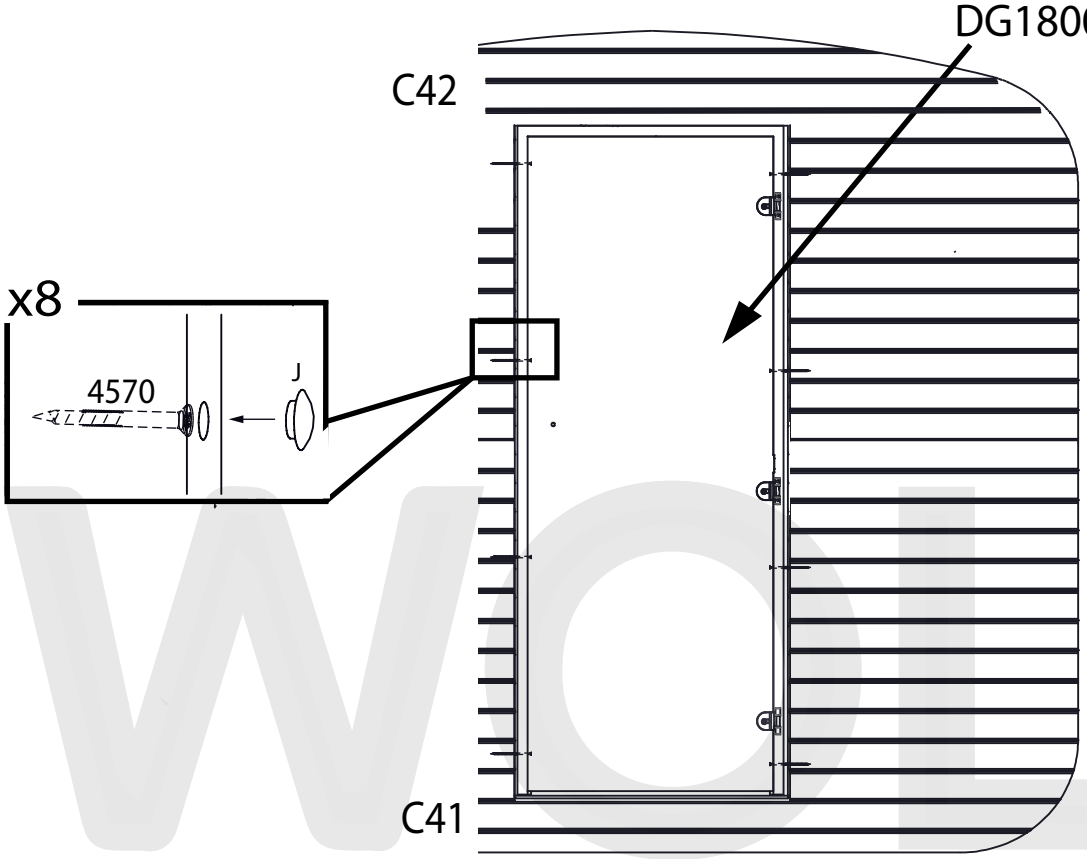

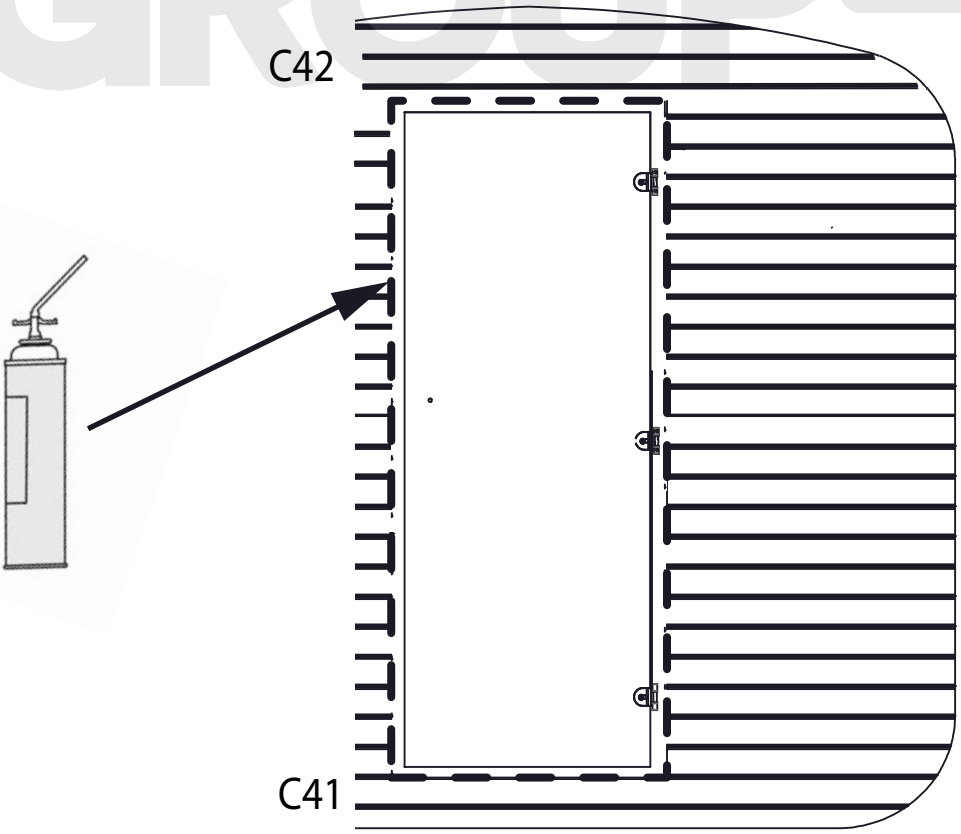

W1800 - 2
W840 - 1
4345 - 16

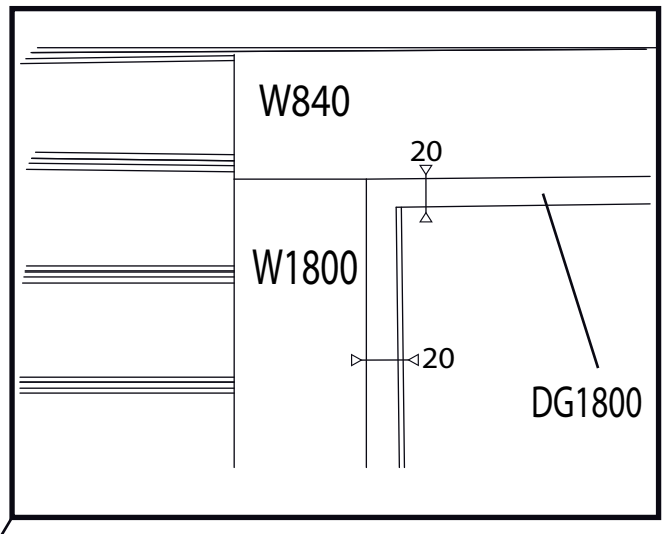

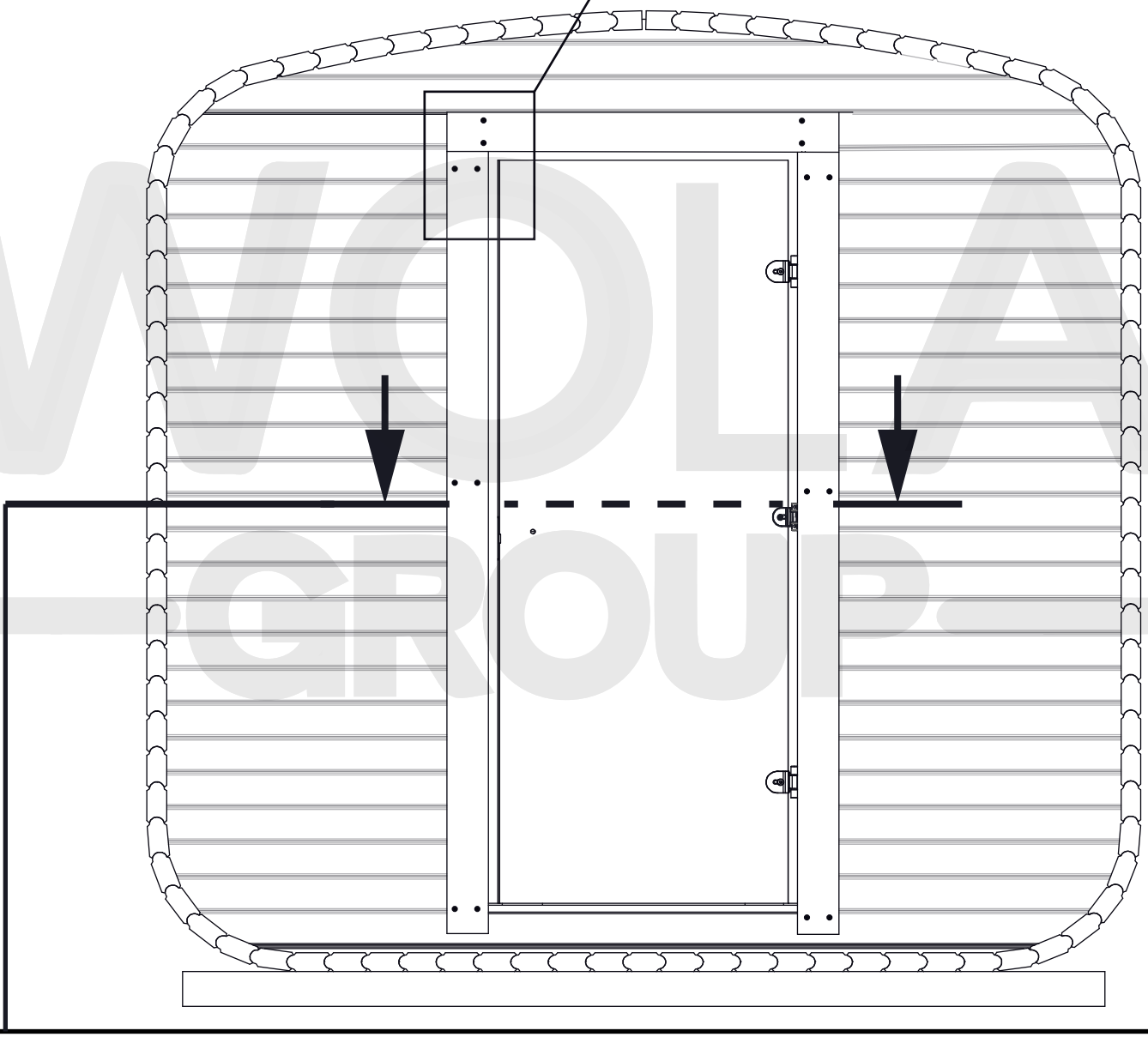

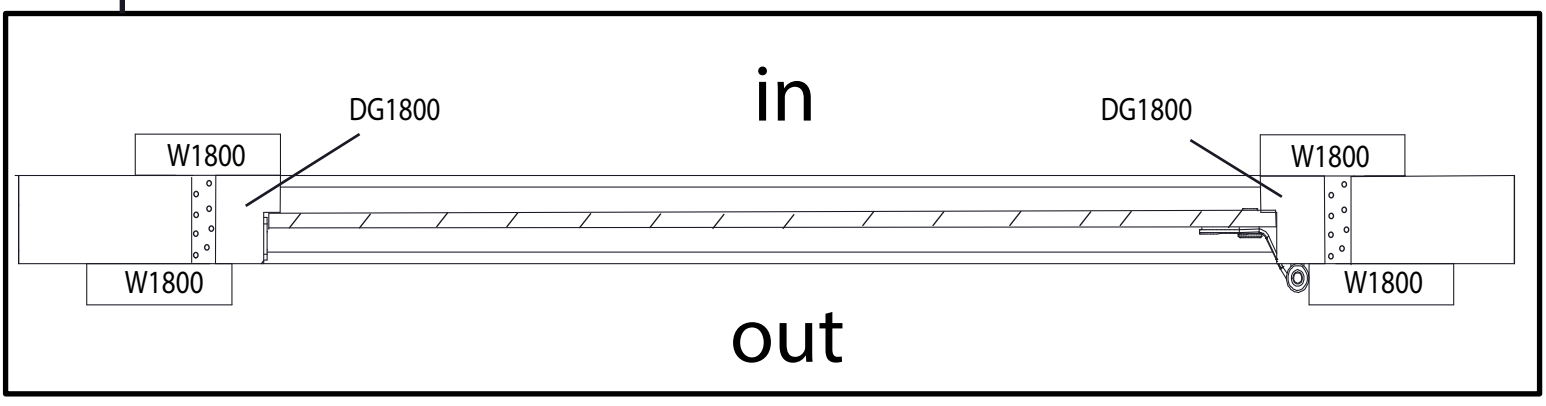

W840 - 1
W1800 - 2
4345 - 16

DOOR INSTALATION
inside view

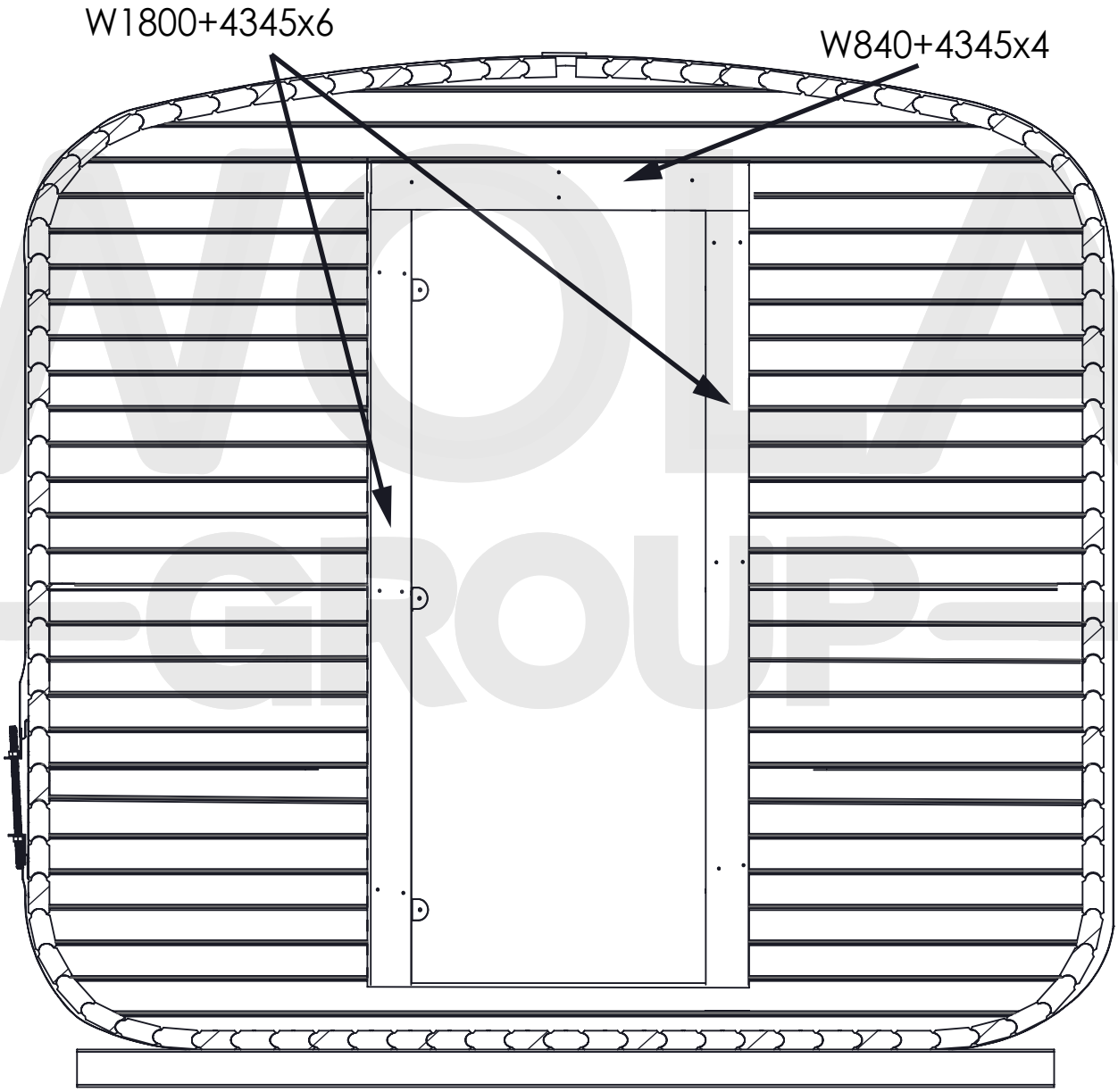

SET 2

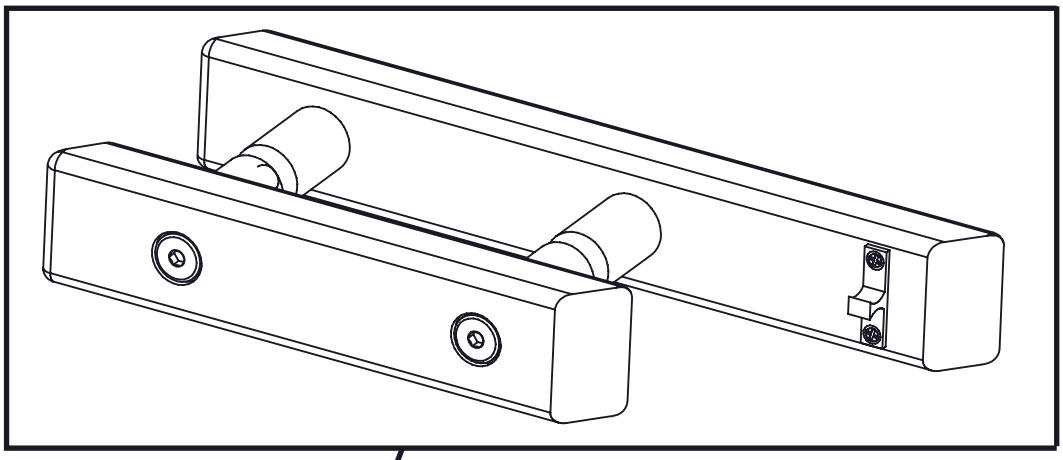

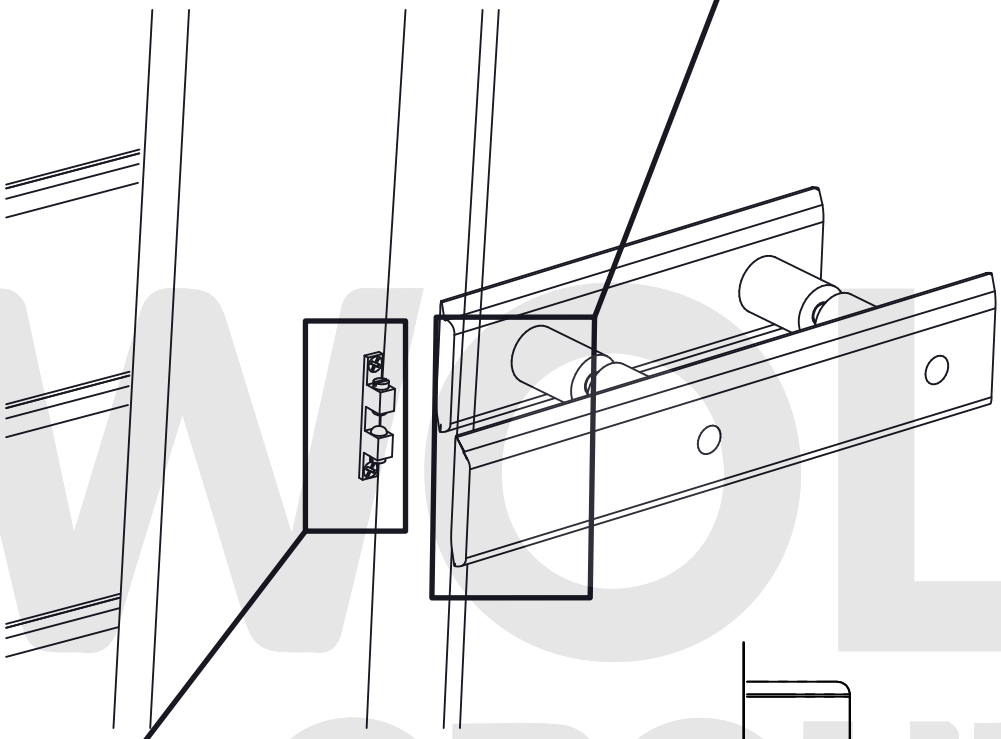

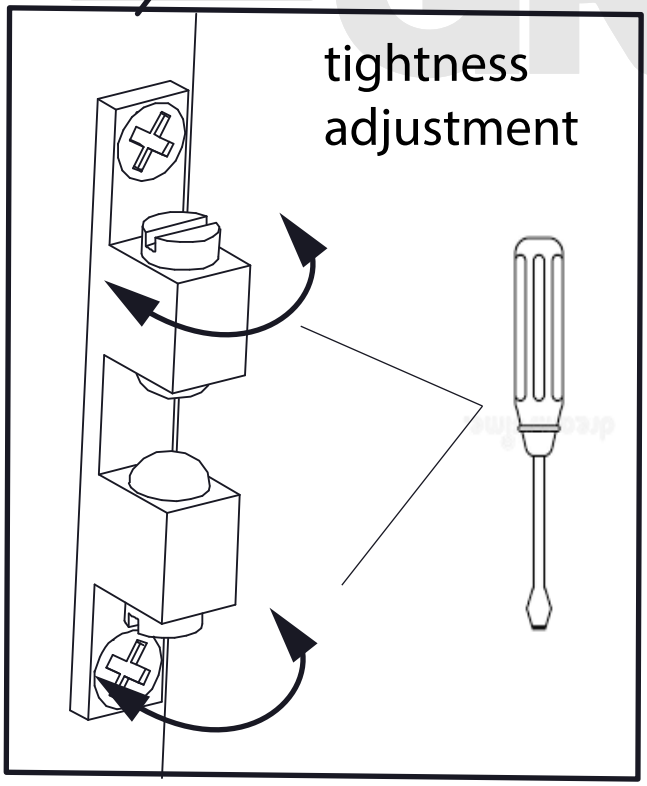

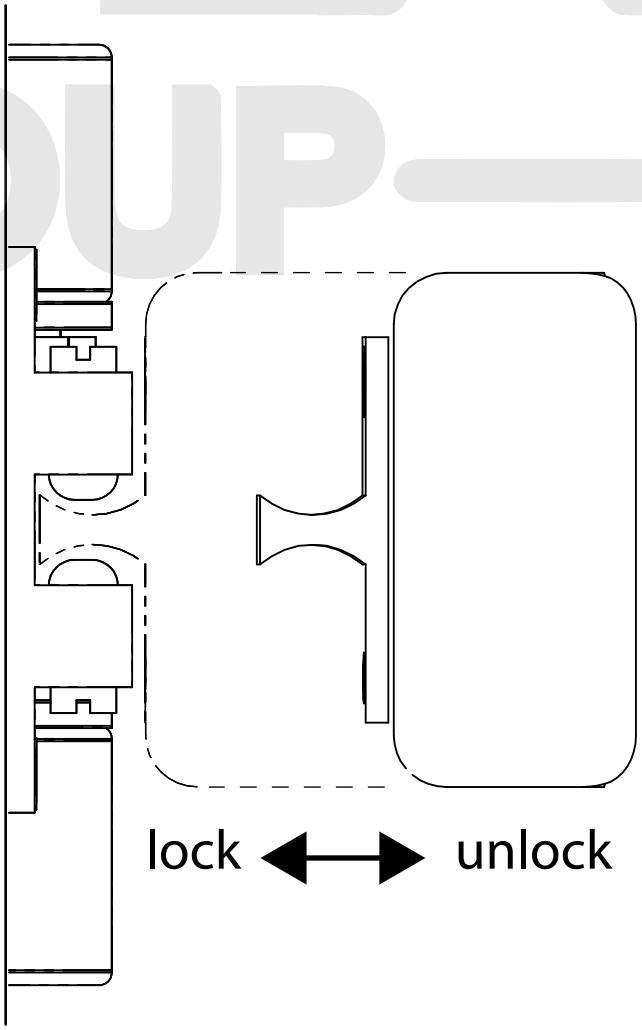

Appendix 1
ROOF FASTENING

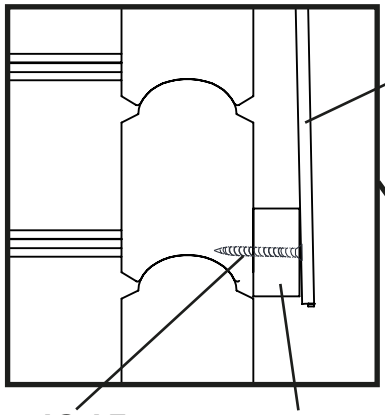





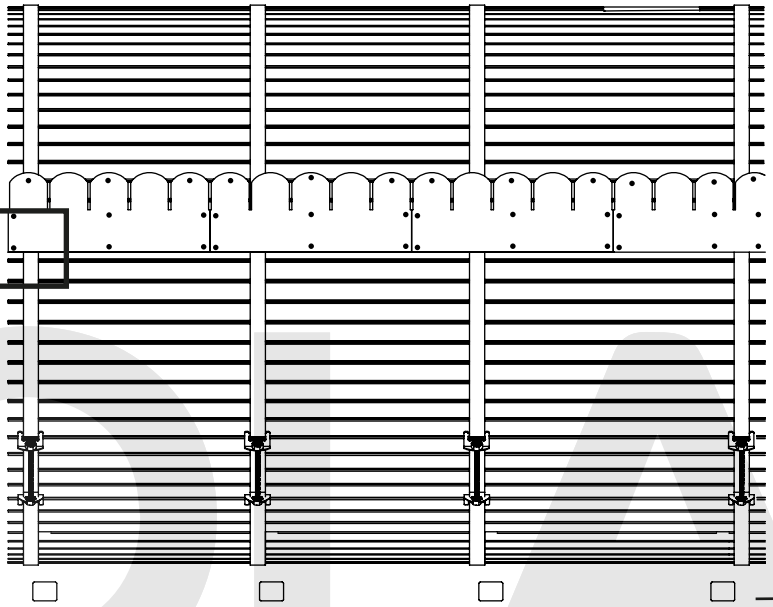

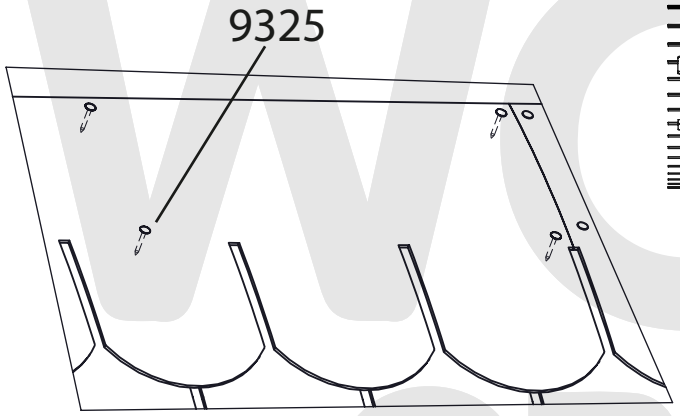

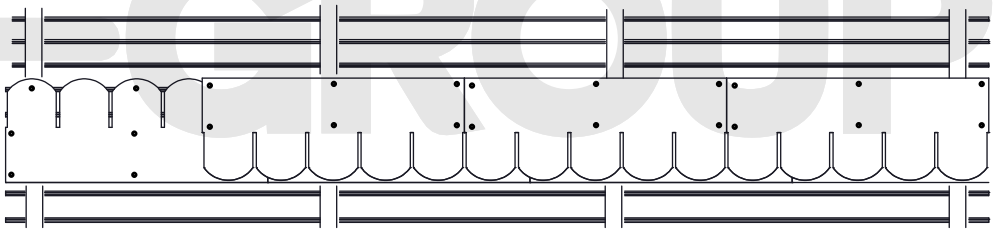

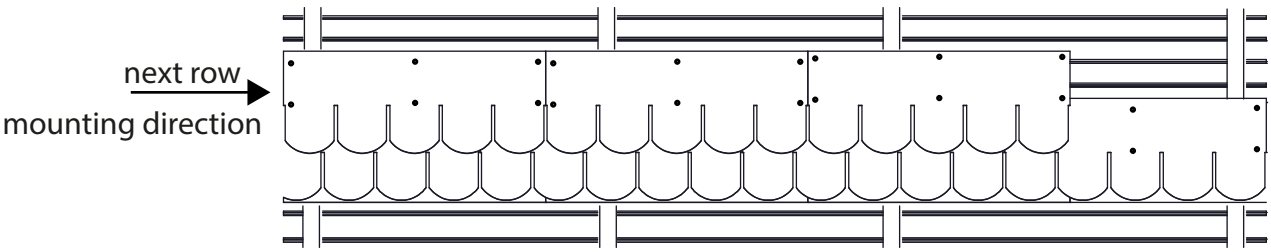

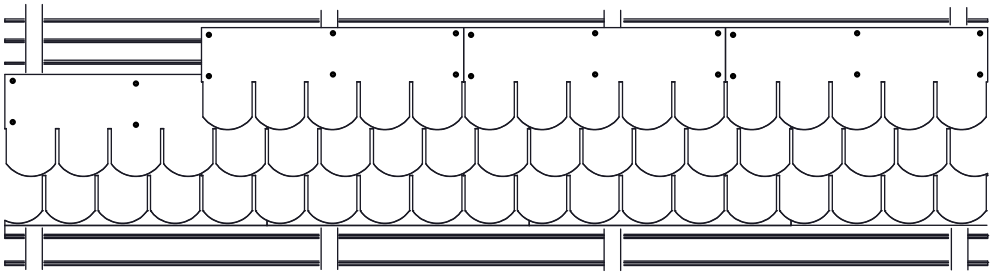

QUADRO SAUNA COVERING

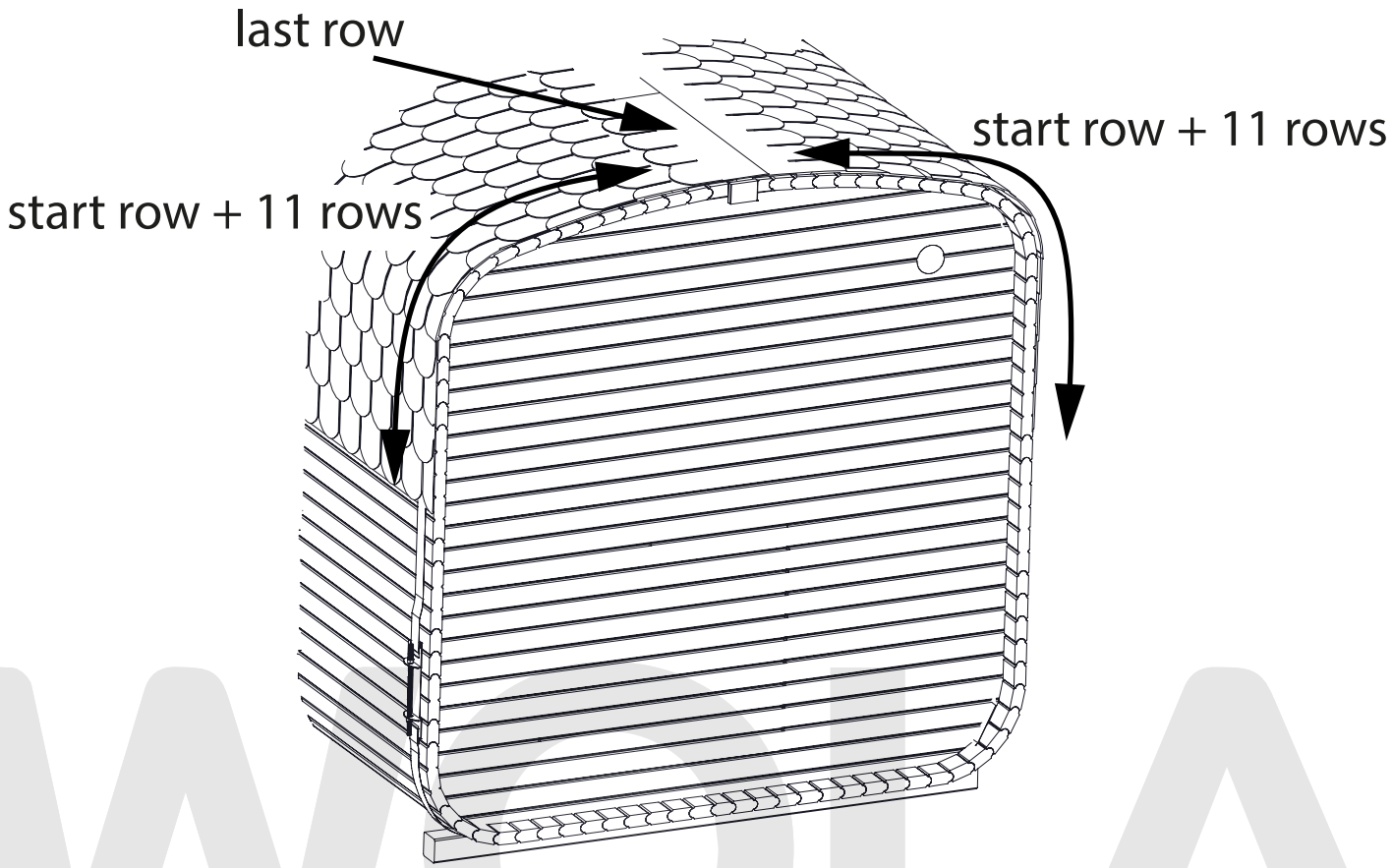

QUADRO SAUNA JOINTS SEALING

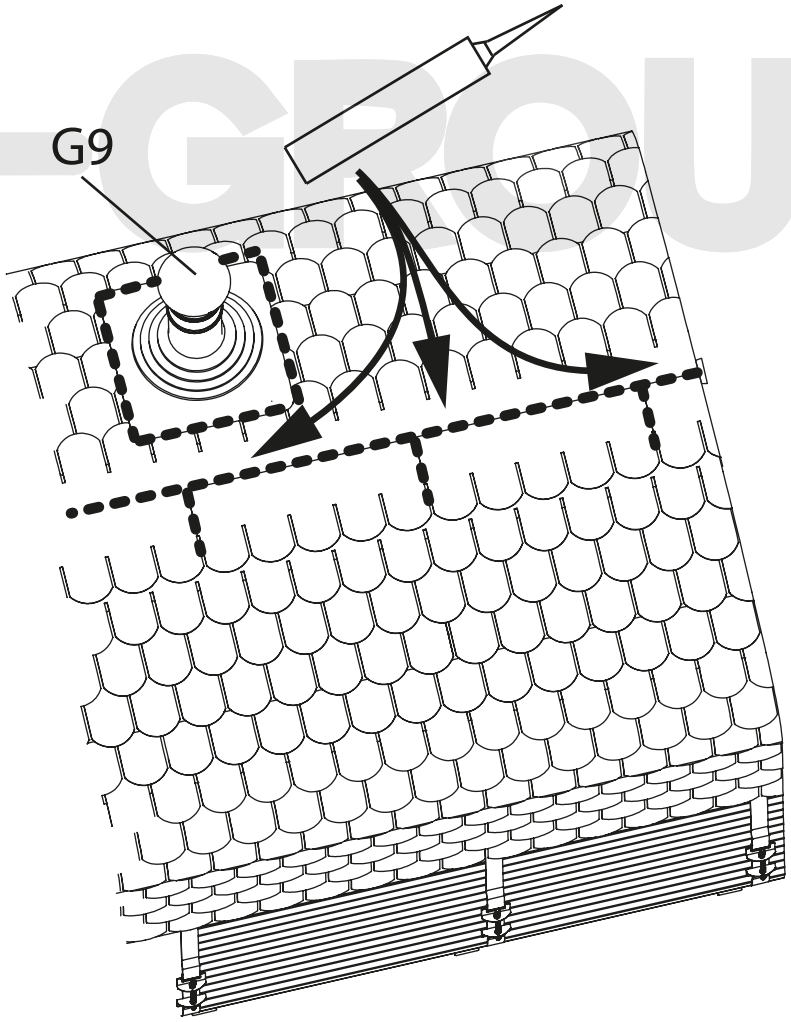

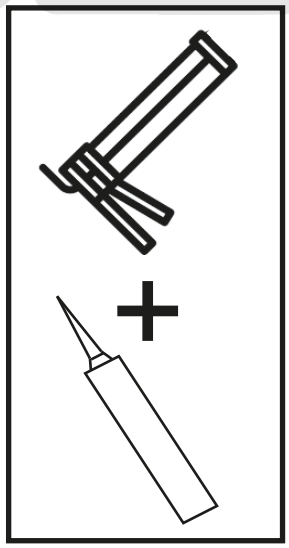

WOLA GROUP

Appendix 2
PANORAMA INSTALLING

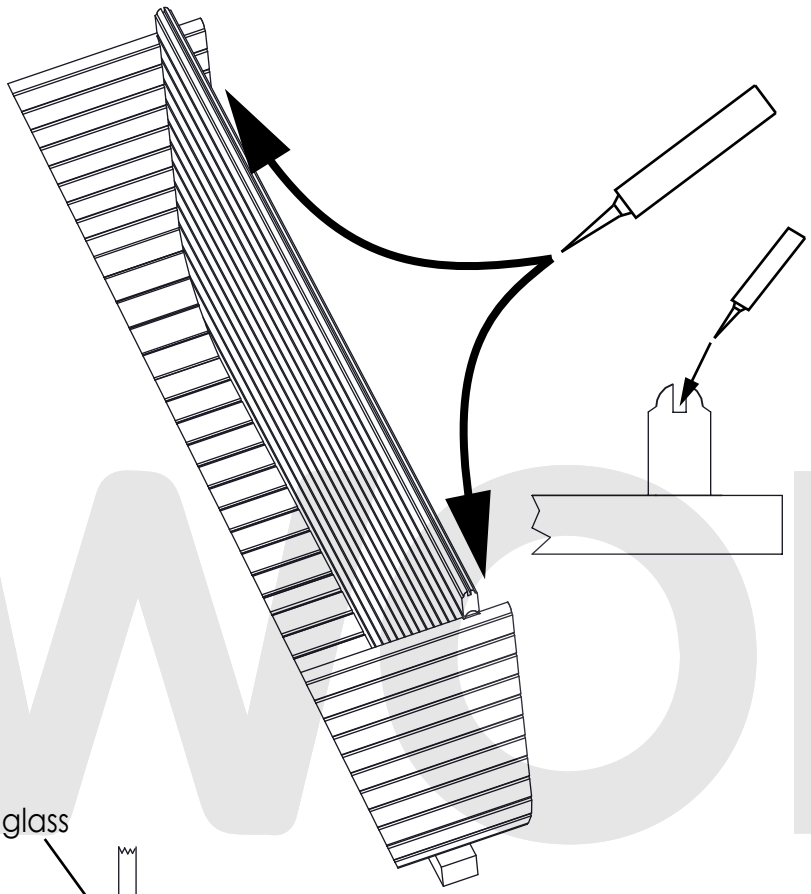

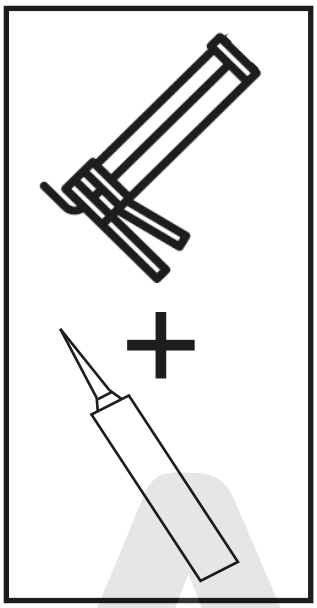

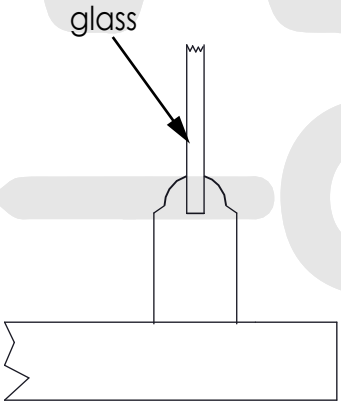

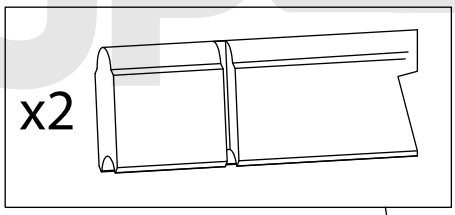

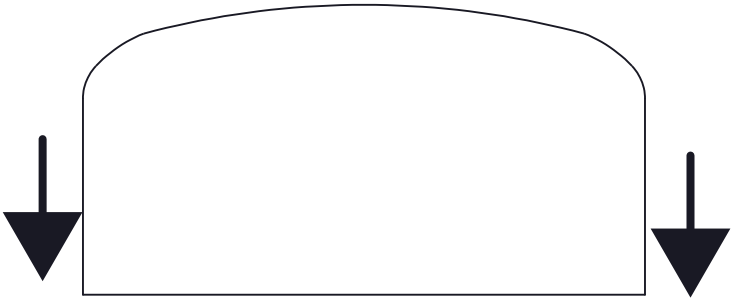

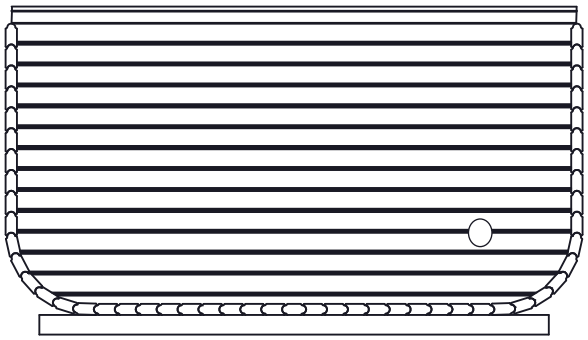

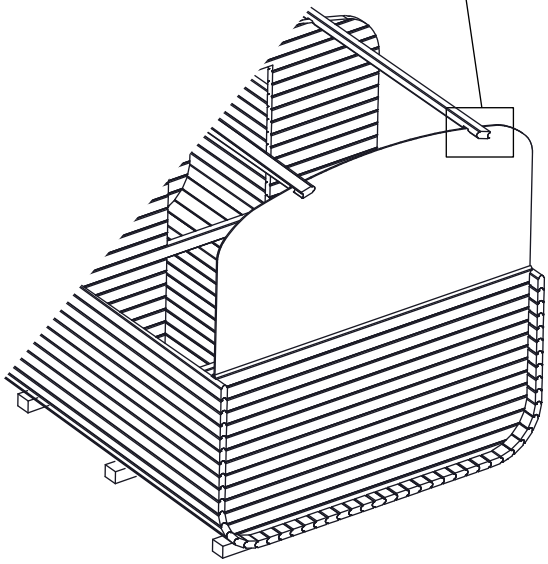

WOLA GROUP

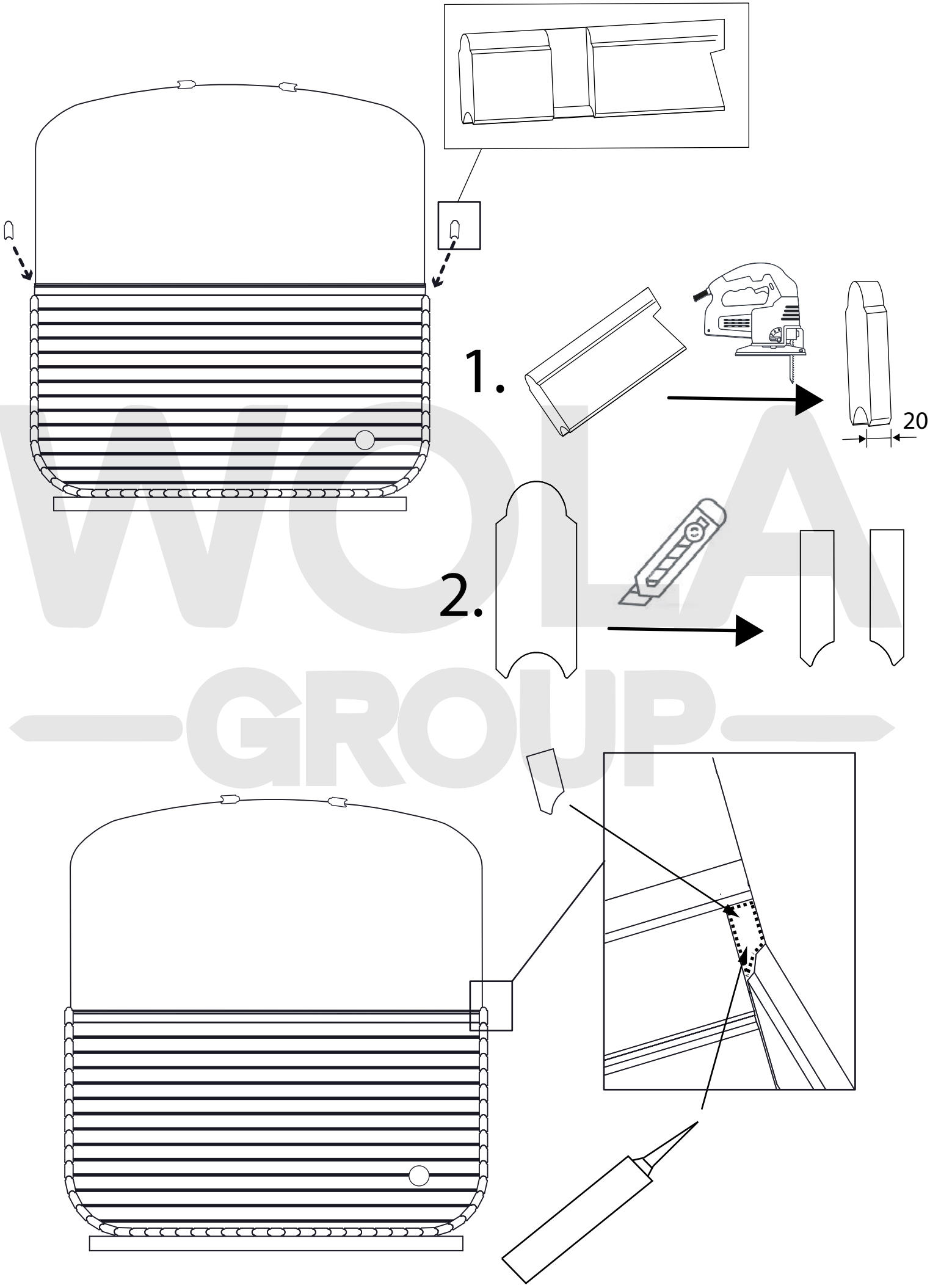
1.
20
2.

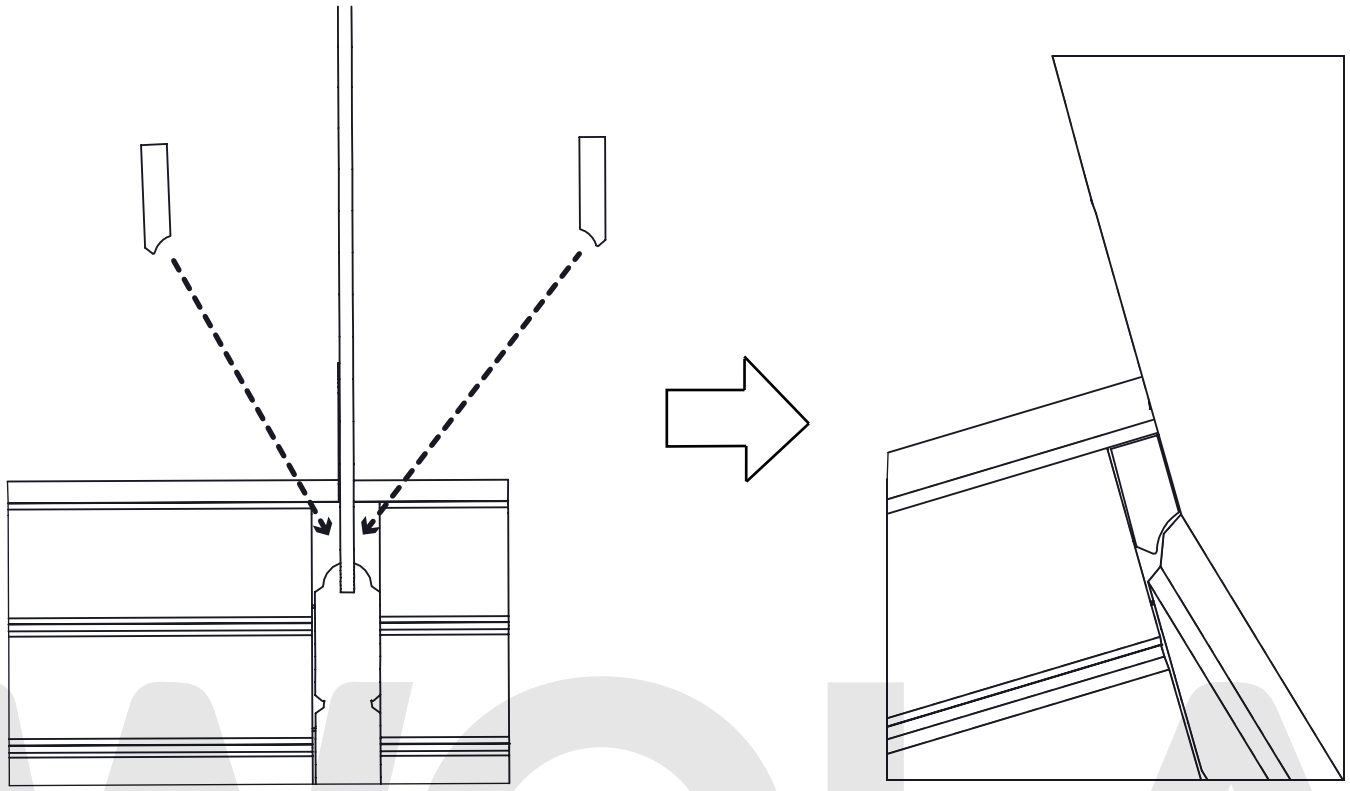

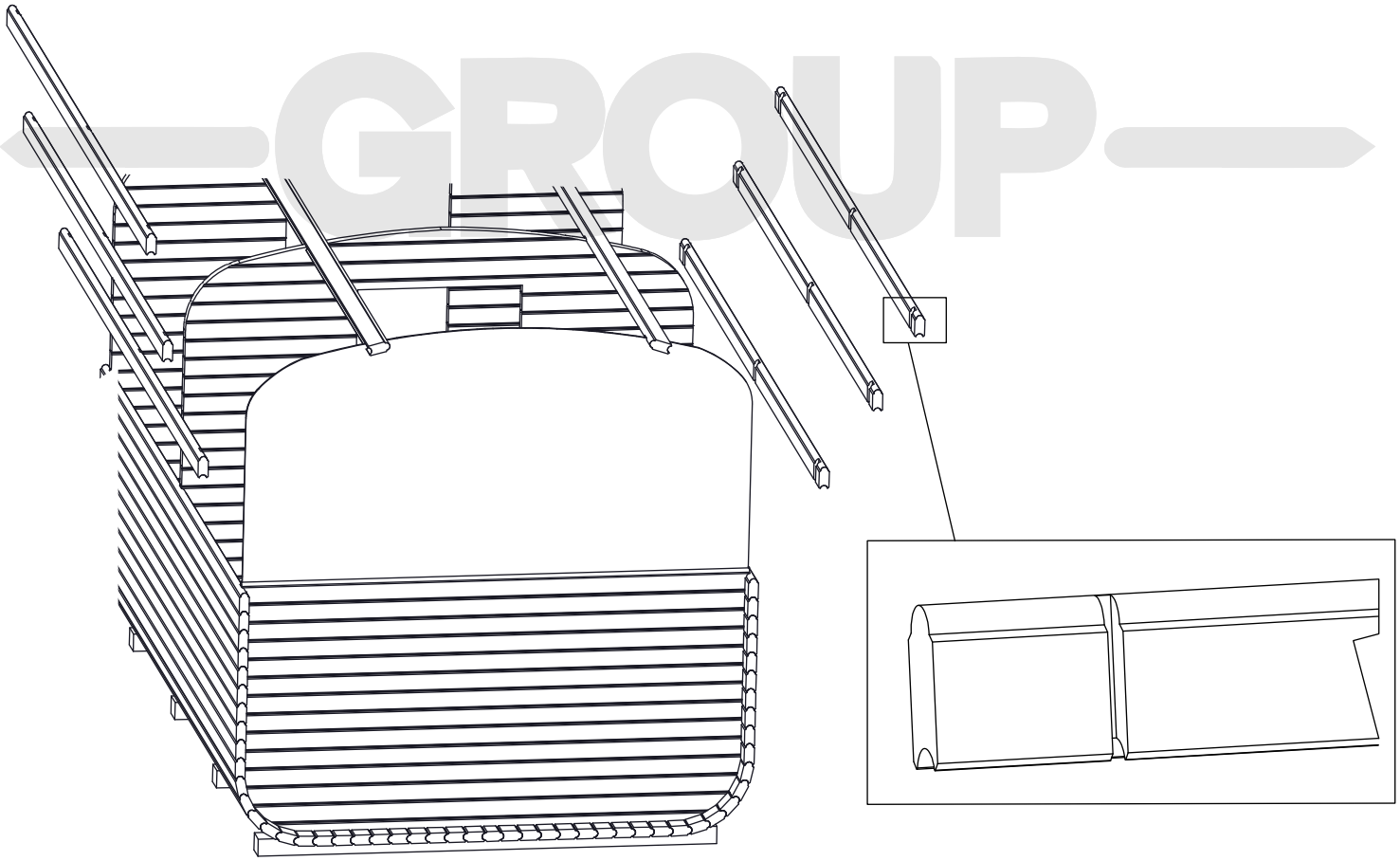

Appendix 3

WOOD-BURNING STOVE AND ELECTRIC STOVE INSTALLING

for set stove only!

COMMON STOVE ASSEMBLING

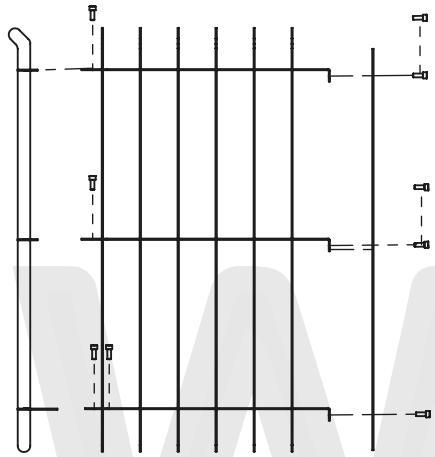

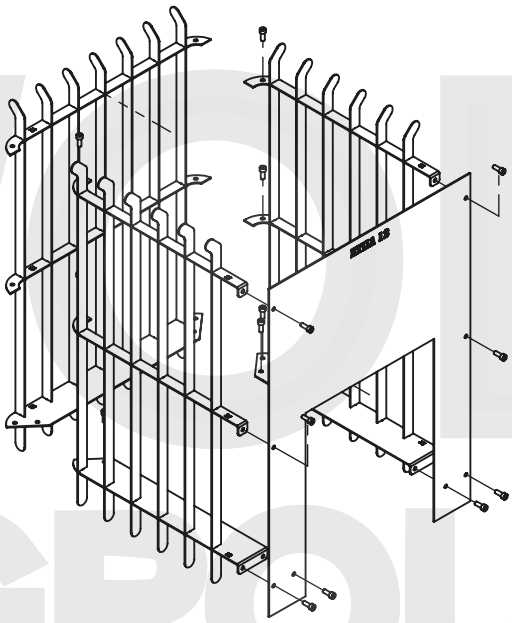

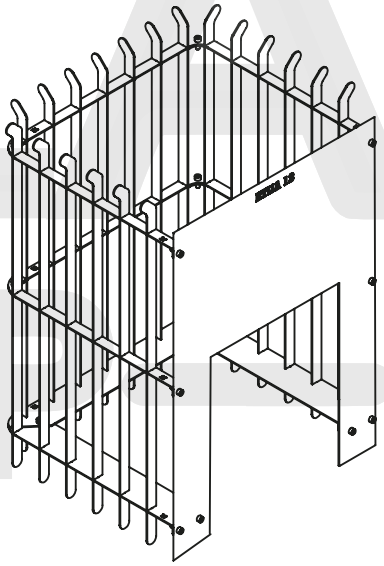



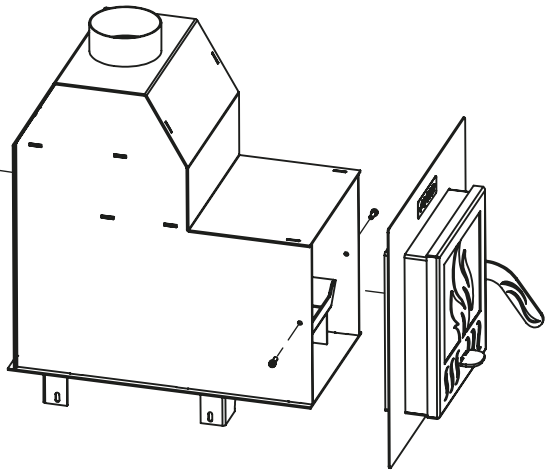

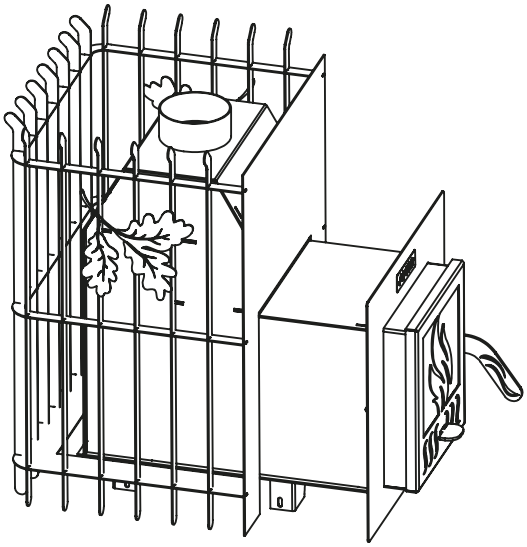

WOLA GROUP

B300 - 2
W400 - 2
4570 - 4

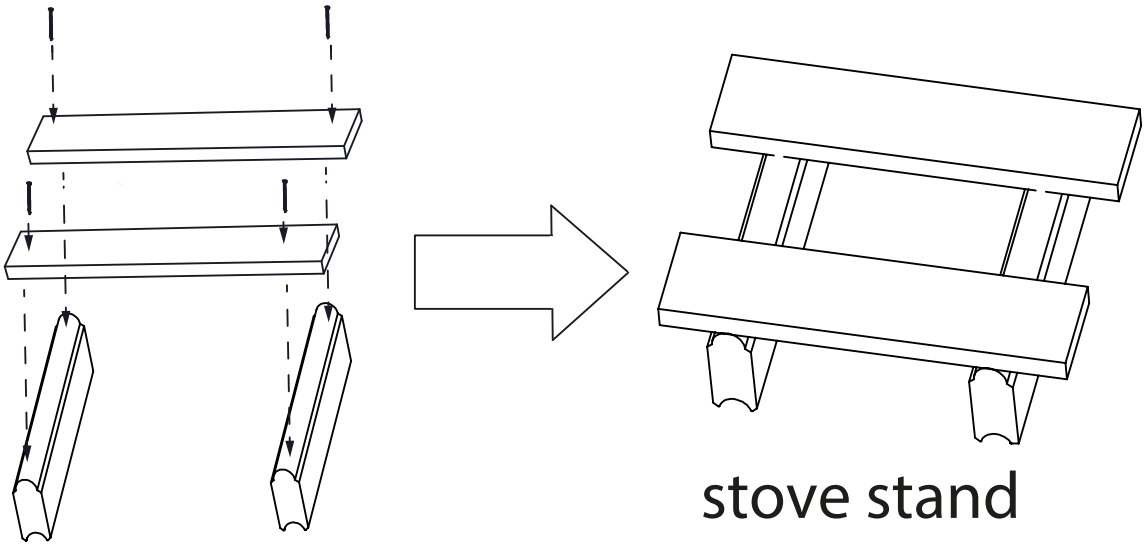

stove stand

ELECTRIC STOVE

G1

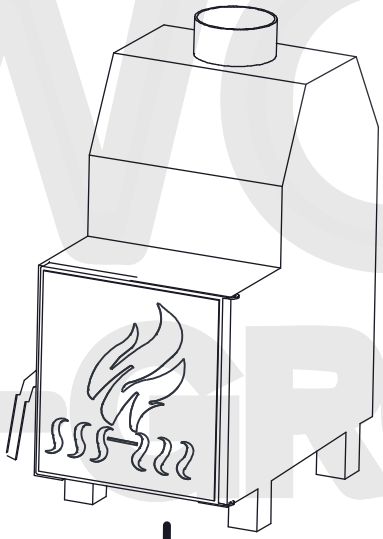

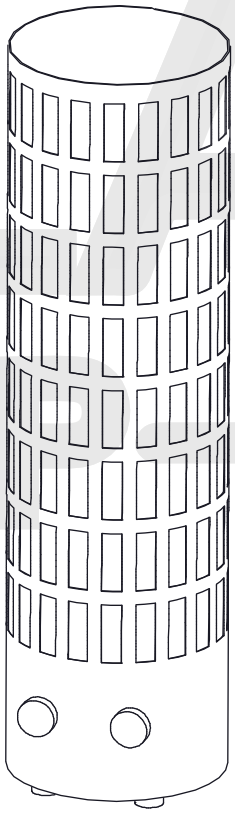

G5

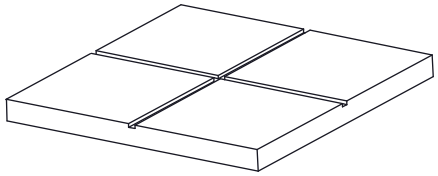

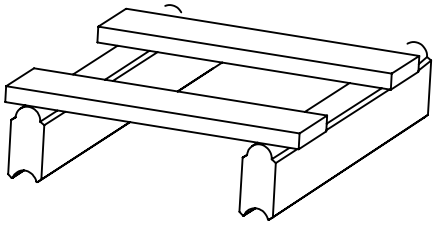

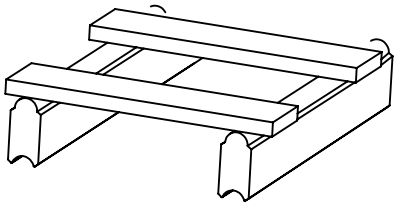

WOLA GROUP

PIPE HOLE

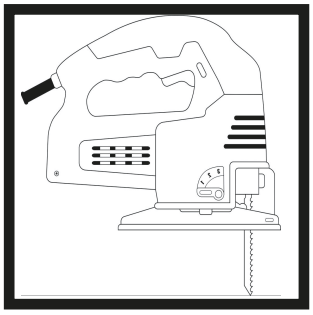

Q2 - 1
4216 - 8

for inner stove door

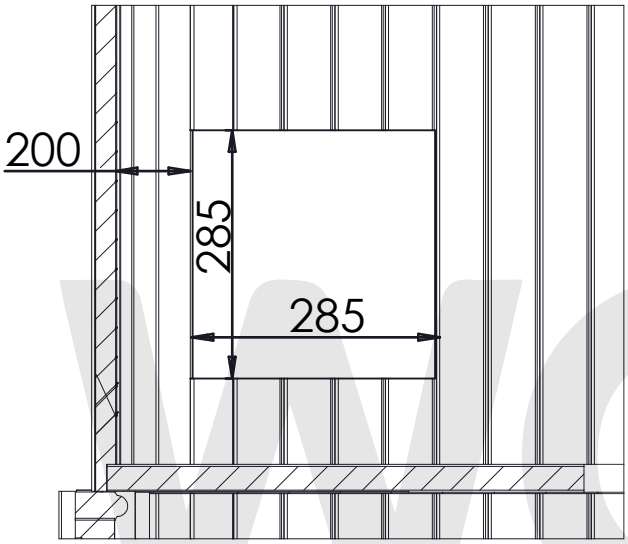

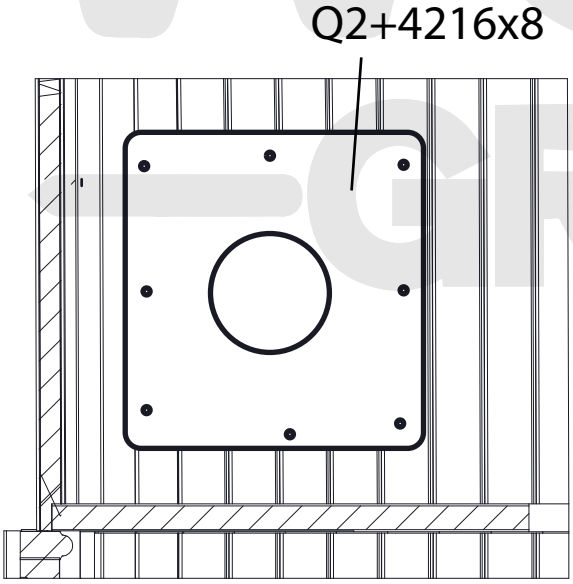

for outer stove door

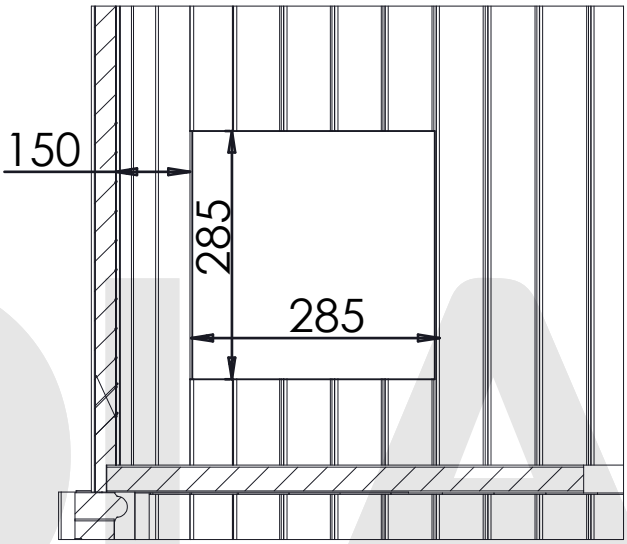

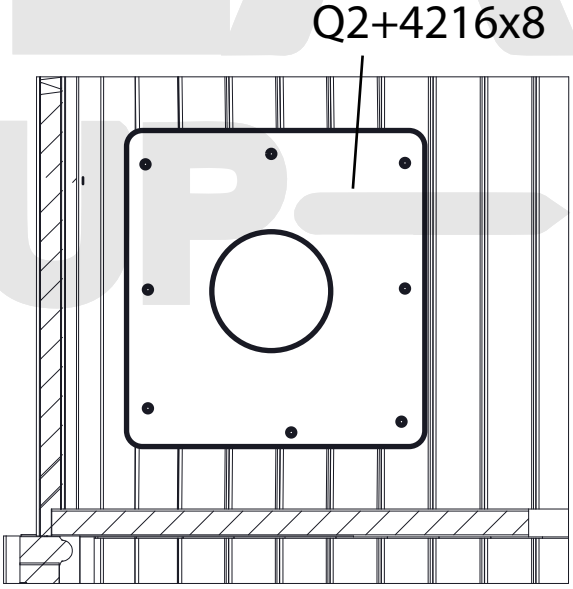

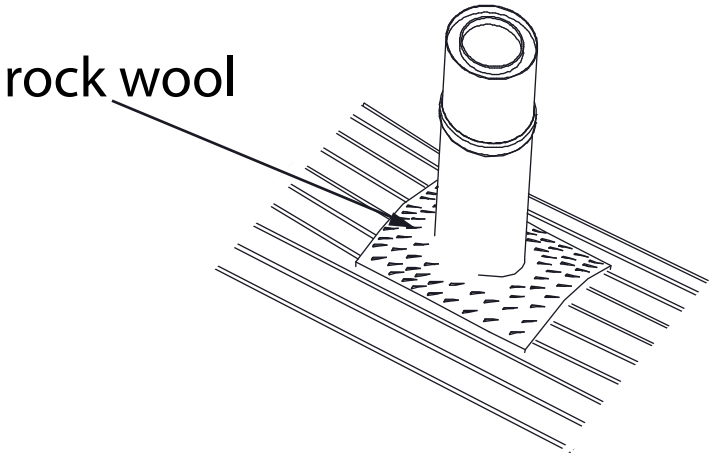

WOLA GROUP

STOVE OPENING
FOR STOVE WITH OUTER DOOR
for set stove only!



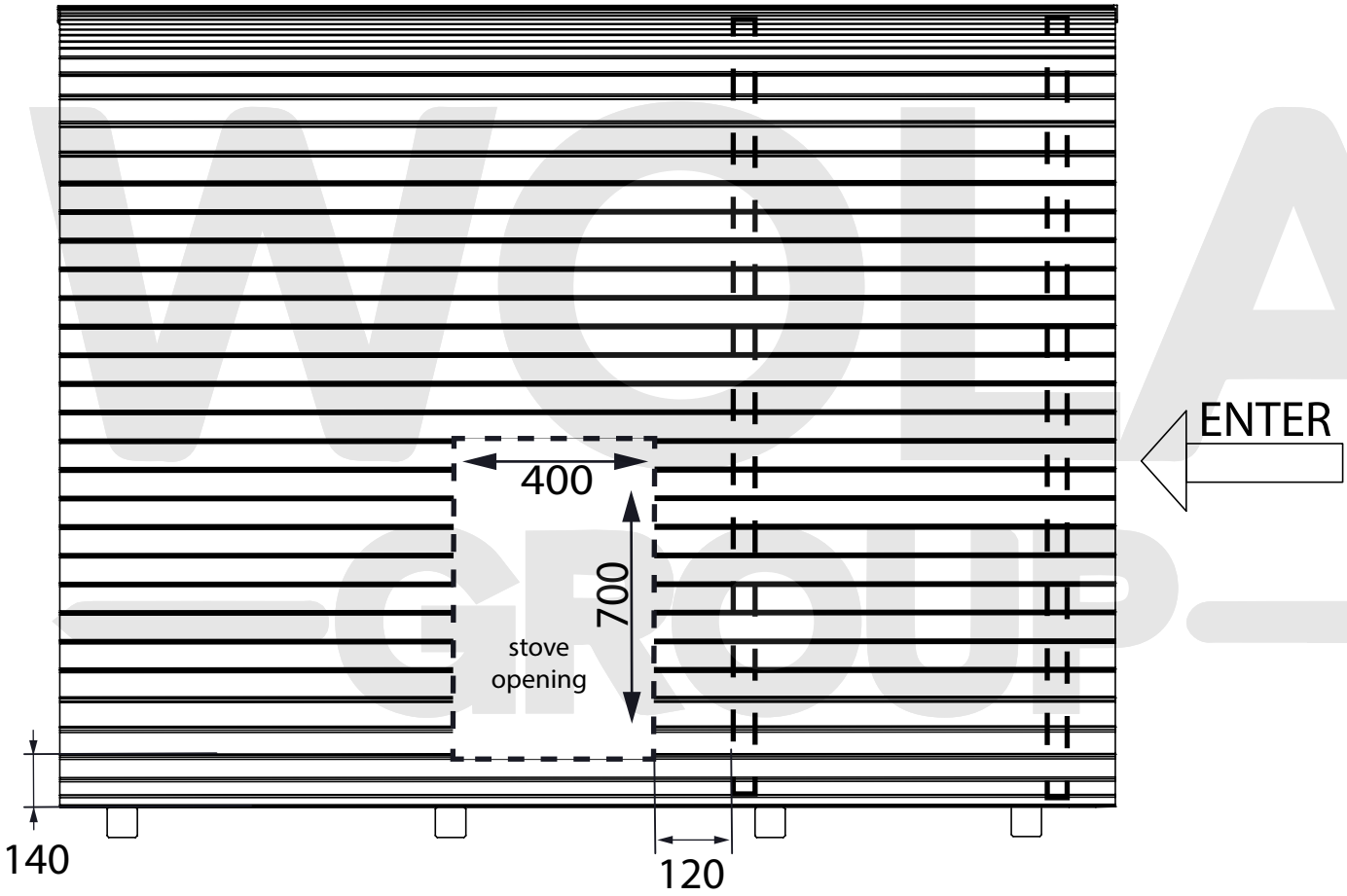

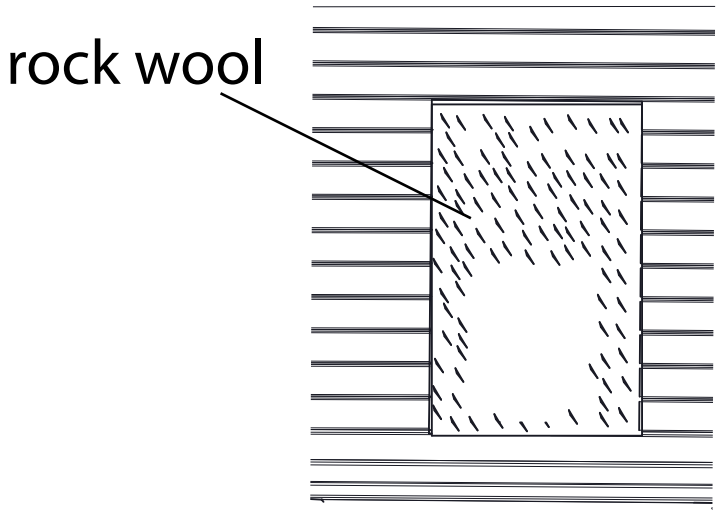

INSIDE VIEW

Q3 - 2
4216 - 20

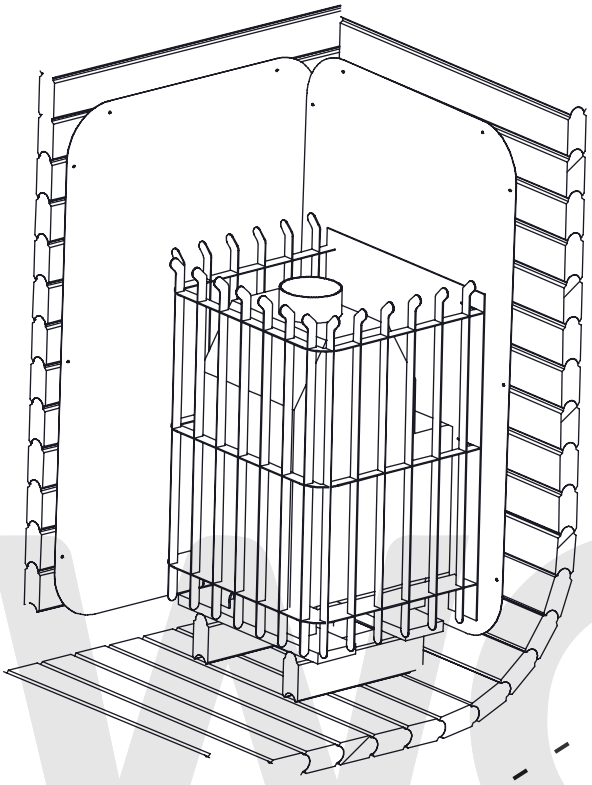

for outer door

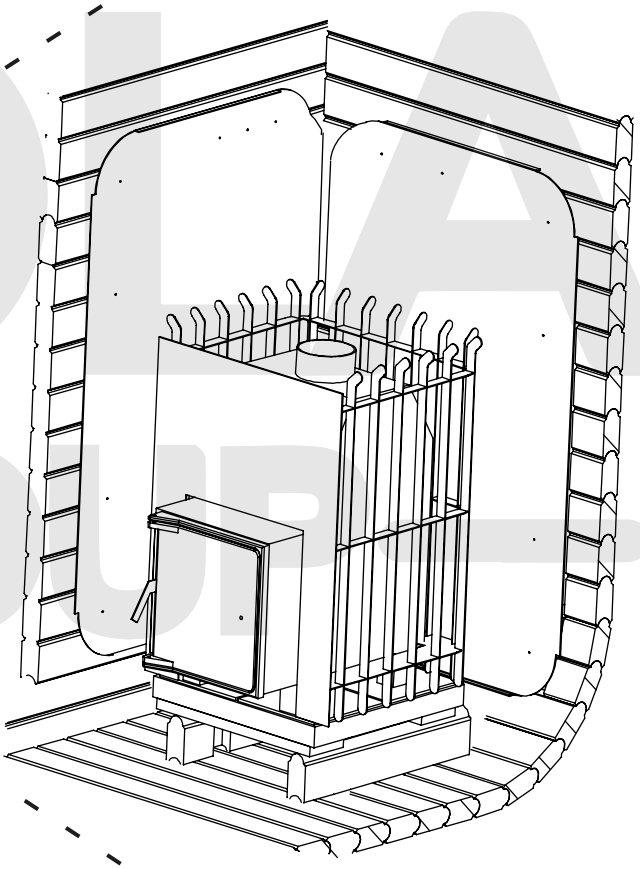

for inner door

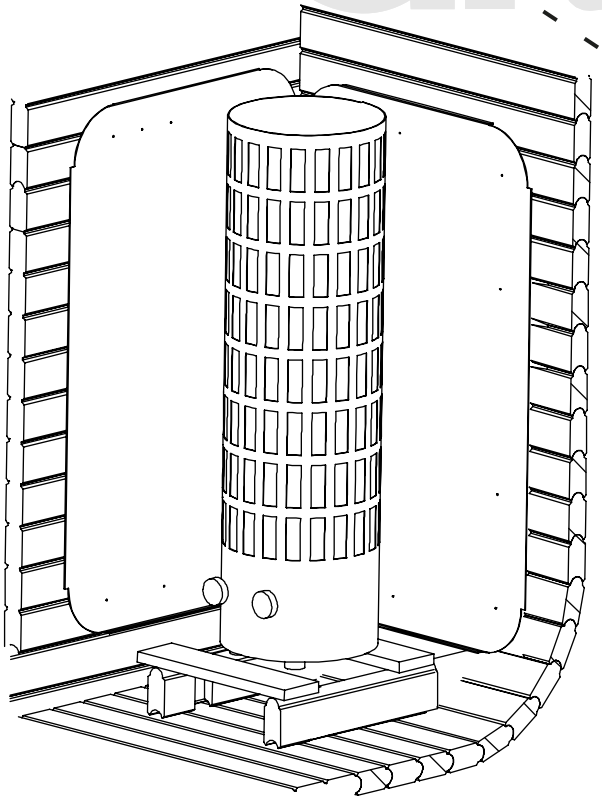

for electric stove

WOLA GROUP

G6 - 1
G7 - 1
G12 - 1

G8 - 1
9325 -12

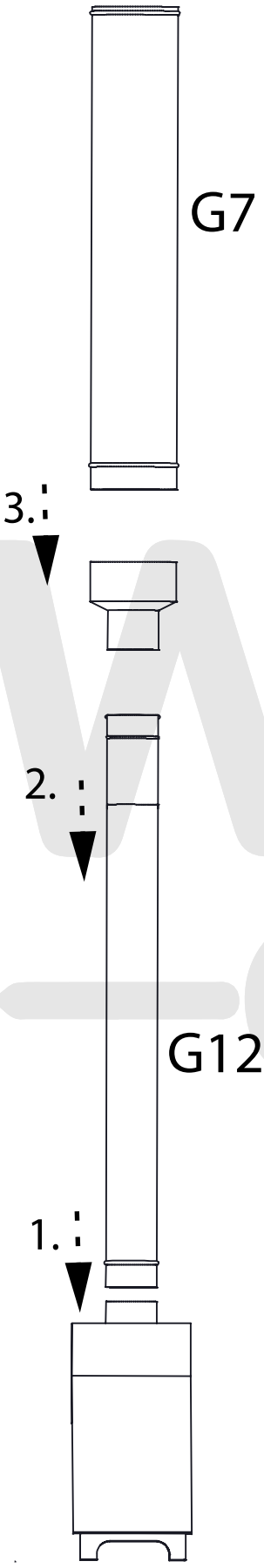

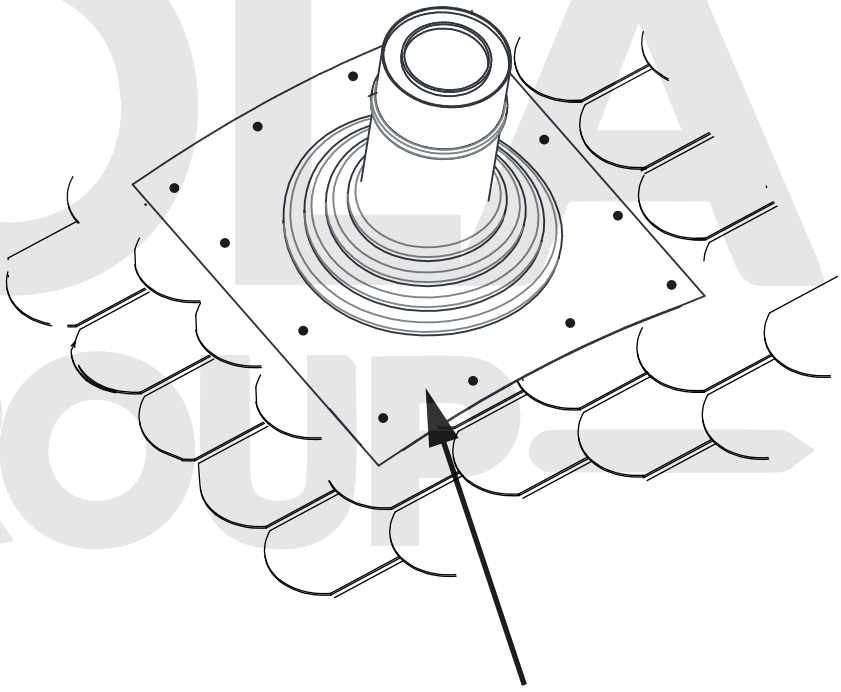

G8 + 12x9325

metal side to down!

WOLA GROUP