Sauna QUADRO 300 model
big steam room
Assembly instructions
(Wood-burning stove)

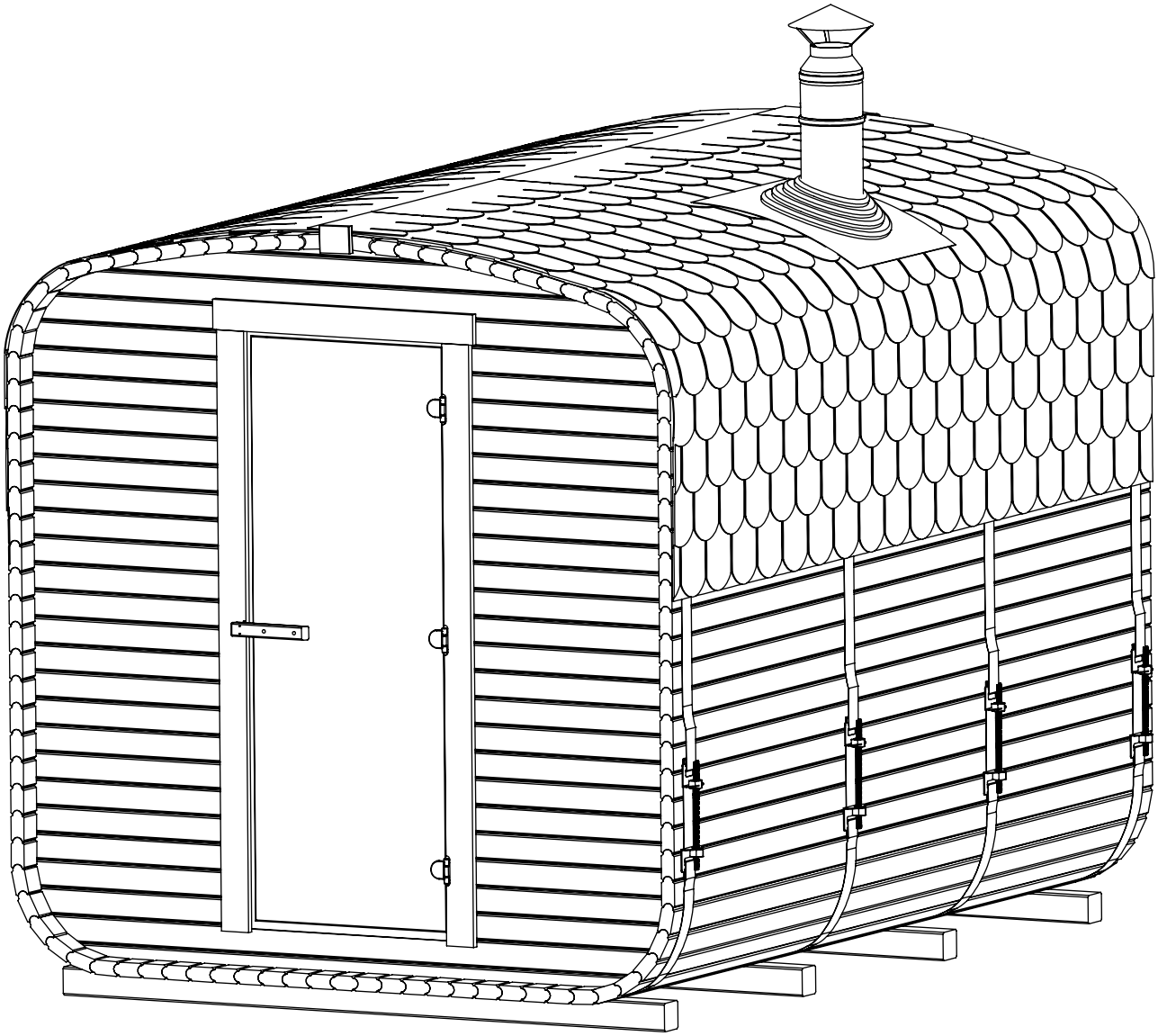

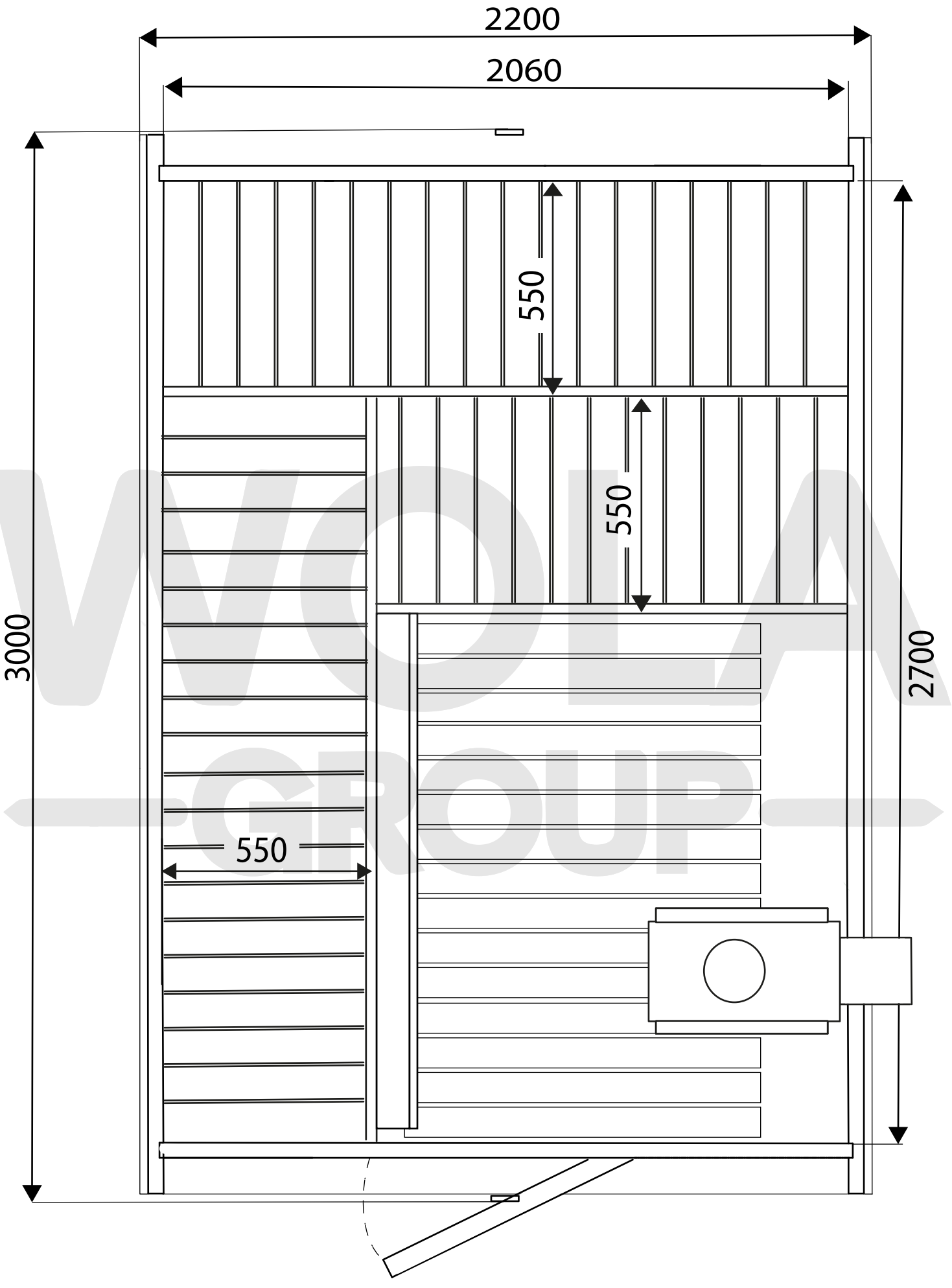
2200
2060
550
550
550
3000
2700

necessary tools

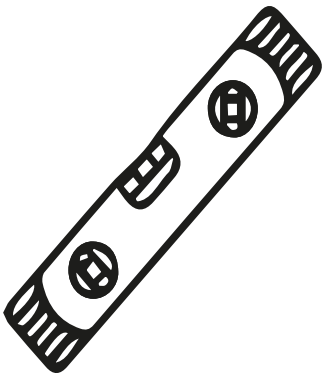

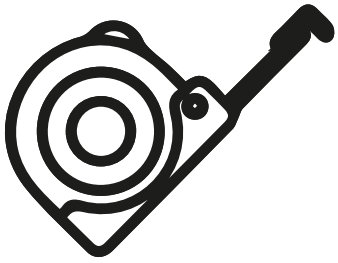

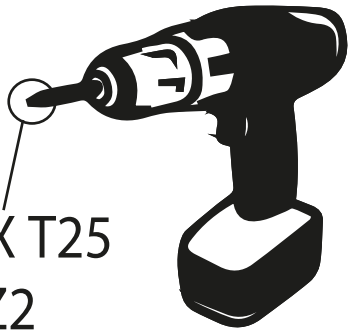

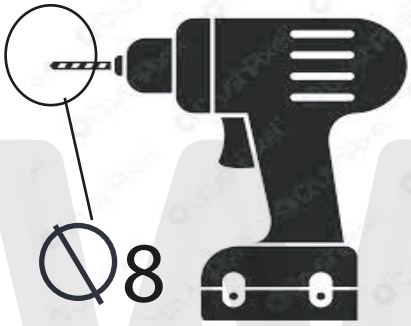







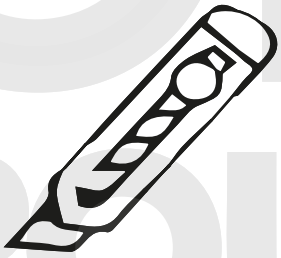

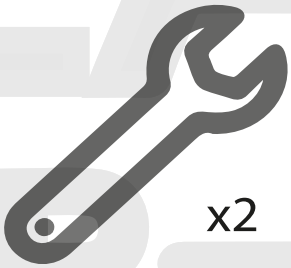



+



impregnation



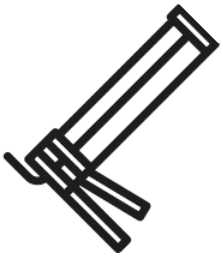

+



bituminous sealant



impregnating oil for benches

NOT INCLUDED!

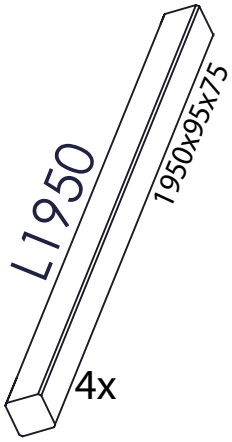
L1950
1950x95x75
4x

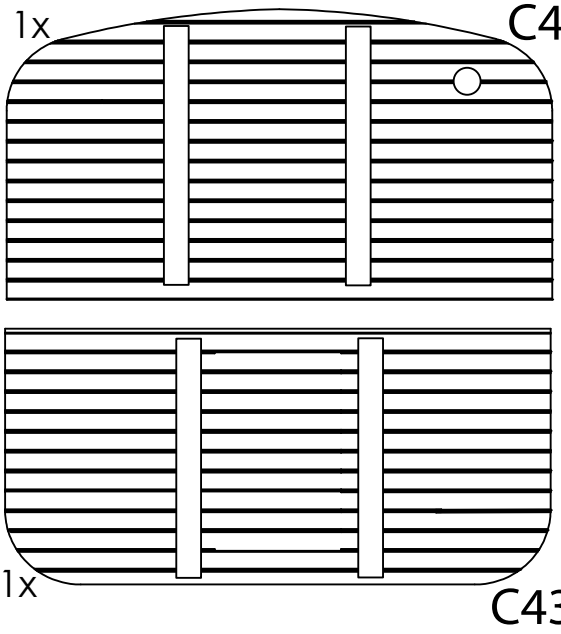
1x
C44
1x
C43

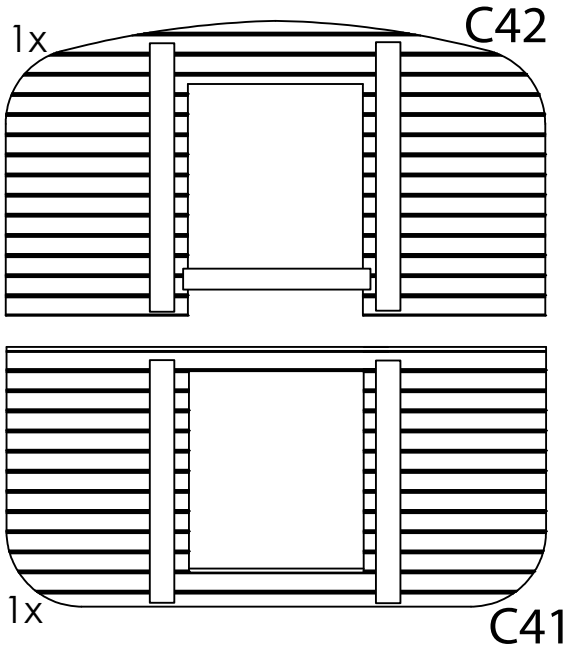
1x
C42
1x
C41

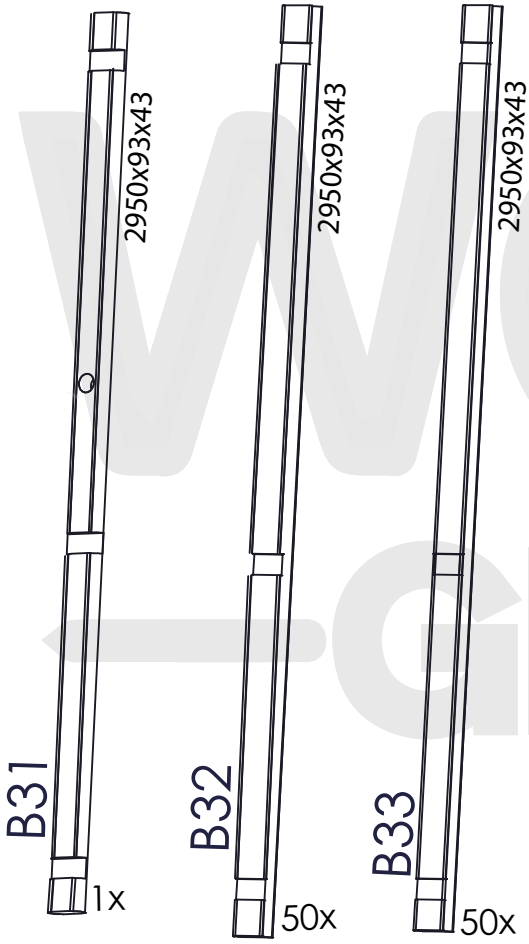
B31
2950x93x43
1x
B32
2950x93x43
50x
B33
2950x93x43
50x


WS
1500x45x20
4x

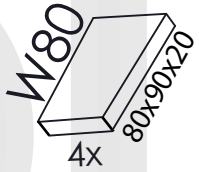
W80
80x90x20
4x

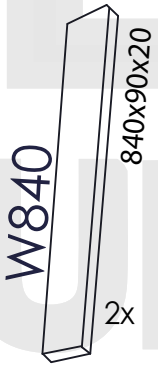
W840
840x90x20
2x

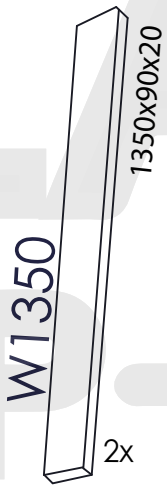
W1350
1350x90x20
2x

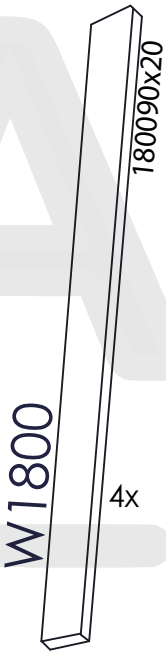
W1800
180090x20
4x

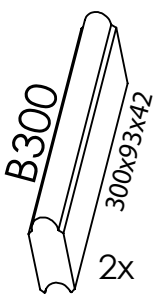
B300
300x93x42
2x

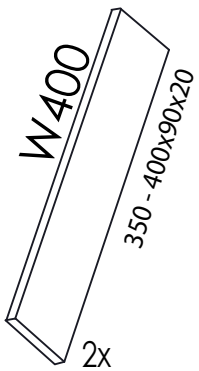
W400
350 - 400x90x20
2x

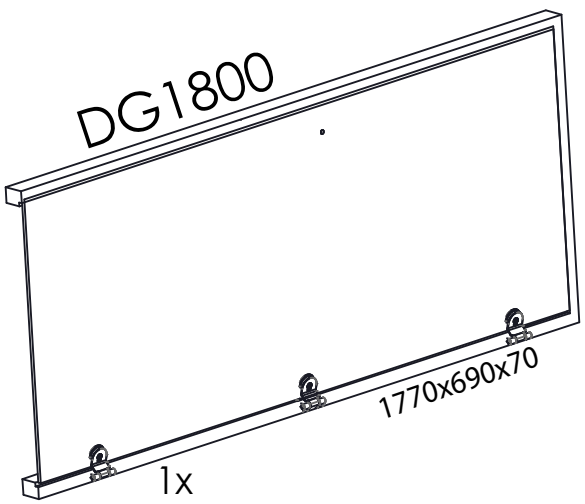
DG1800
1770x690x70
1x

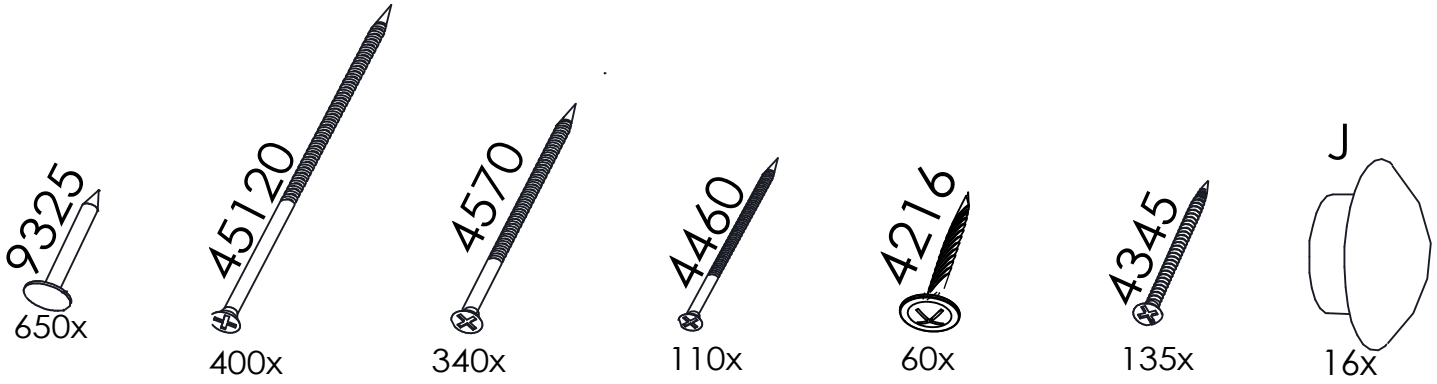
9325
650x
45120
400x
4570
340x
4460
110x
4216
60x
4345
135x
J
16x

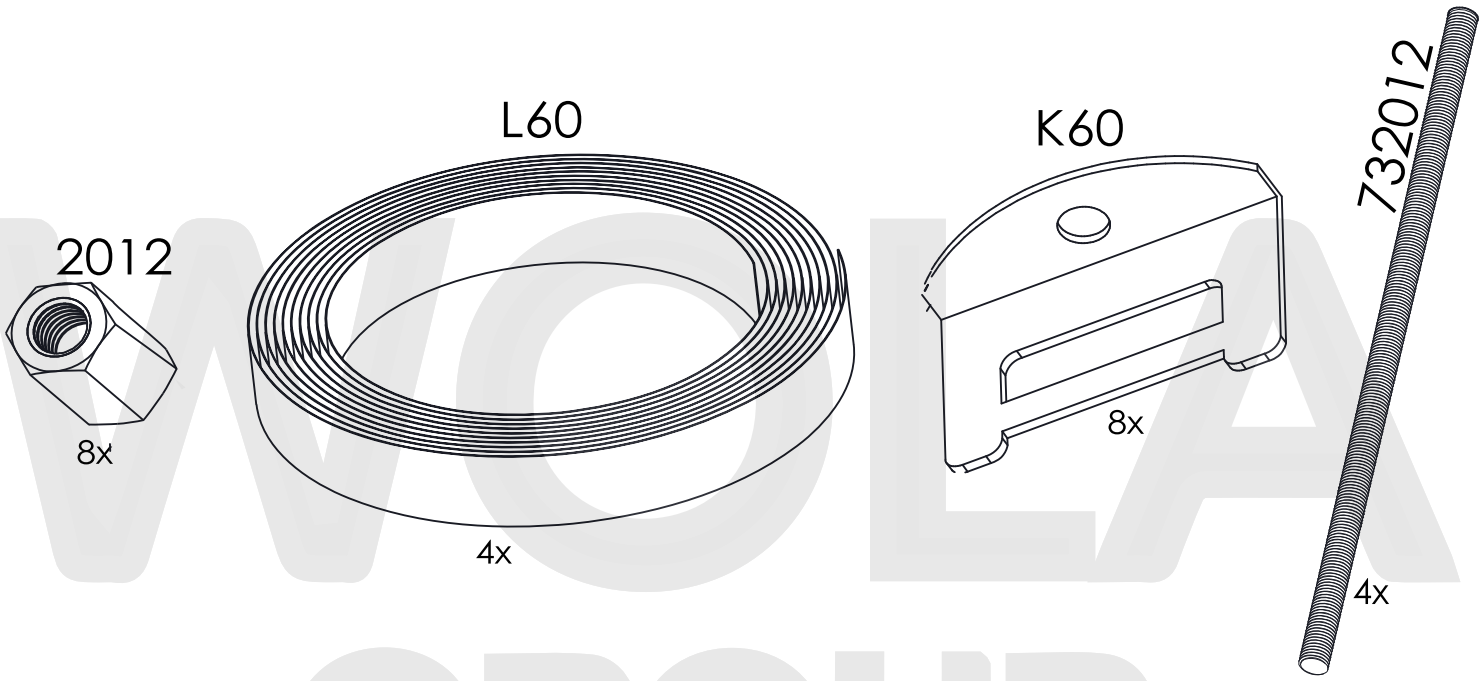
2012
8x
L60
4x
K60
8x
732012
4x

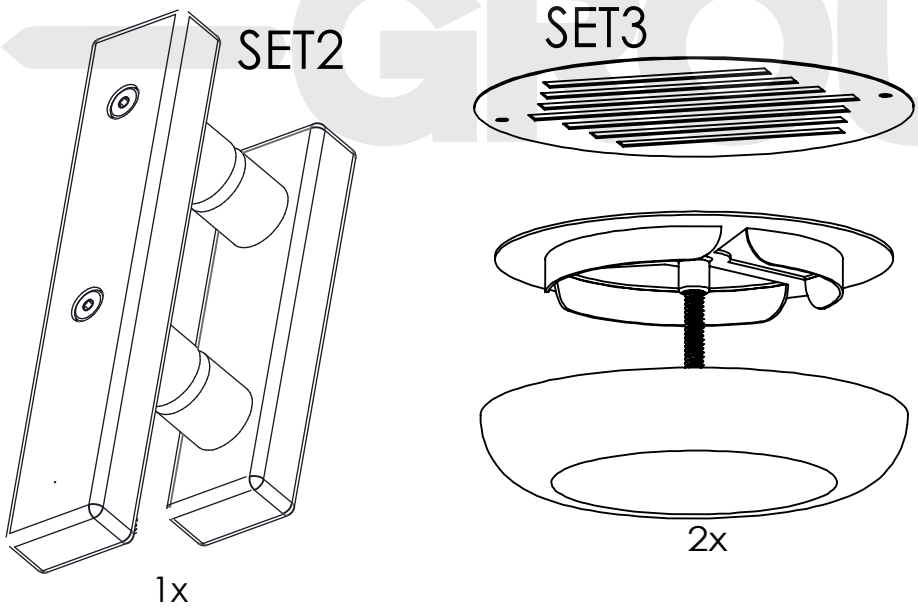
SET2
1x
SET3
2x

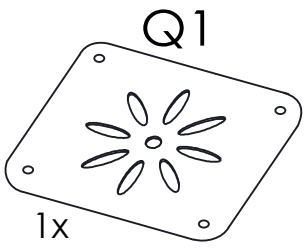
Q1
1x

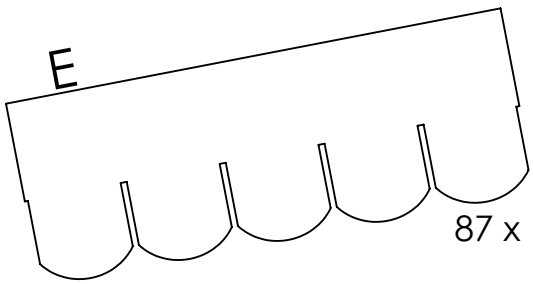
E
87 x

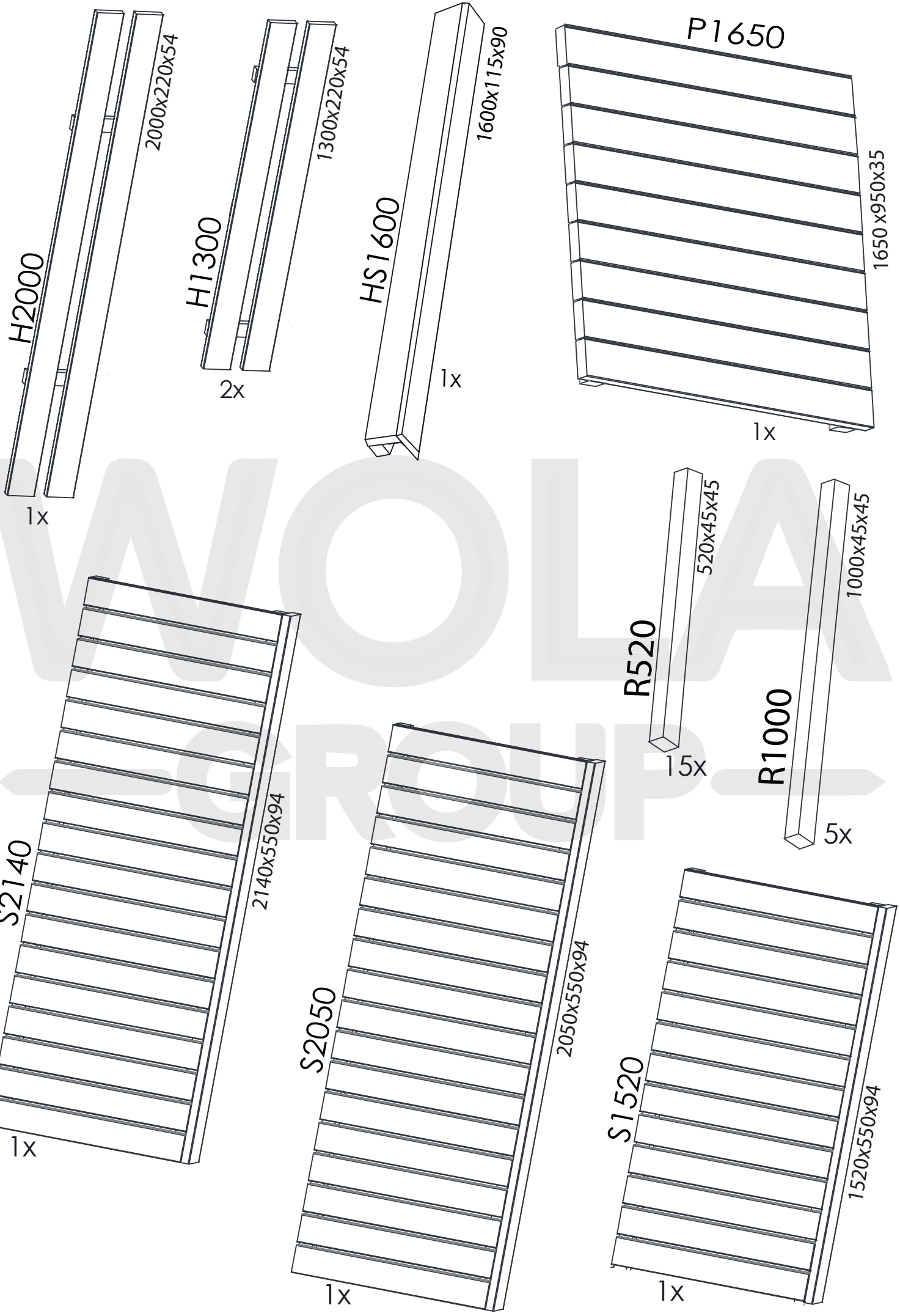
H2000
2000x220x54
1x
H1300
1300x220x54
2x
HS1600
1600x115x90
1x
P1650
1650 x950x35
1x
R520
520x45x45
15x
R1000
1000x45x45
5x
S2140
2140x550x94
1x
S2050
2050x550x94
1x
S1520
1520x550x94
1x

A PANORAMA INSTALATION SET (NOT INCLUDED)
PURCHASED SEPARATELY

for installation see **Appendix 2**

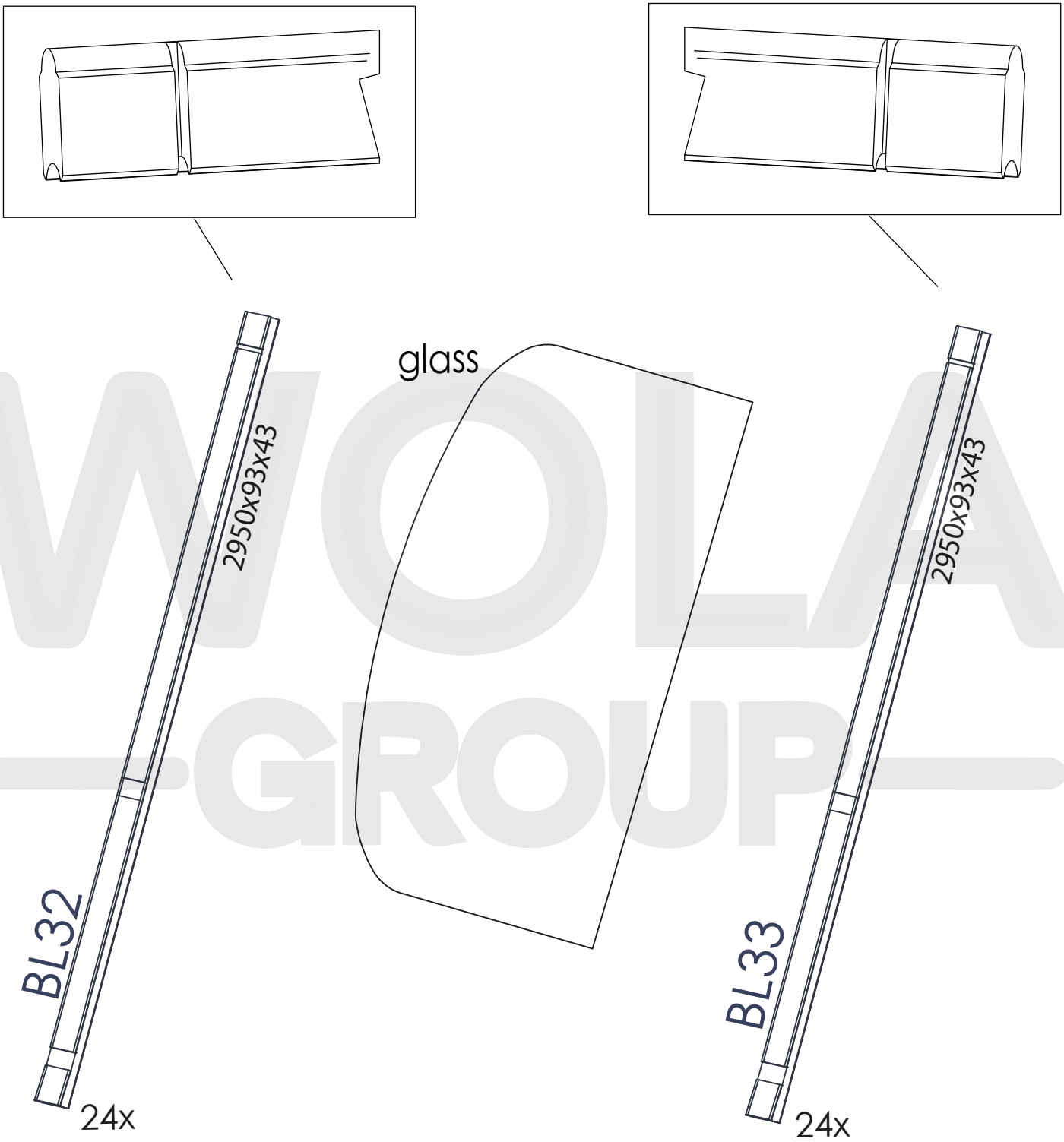

WOLA GROUP

A STOVE INSTALATION SET (NOT INCLUDED)
PURCHASED SEPARATELY

for installation see **Appendix 3**

G12

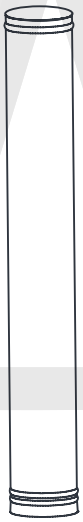

1x

G7



1x

G8

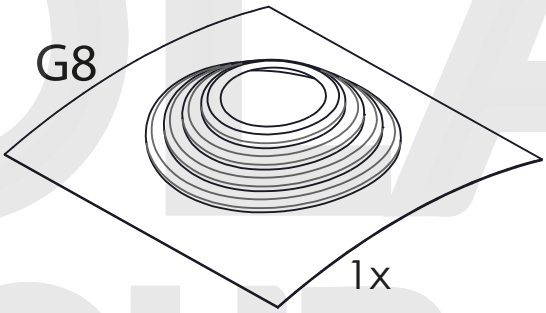

1x

G9

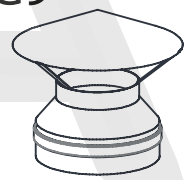

1x

G6

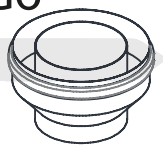

1x

Q2

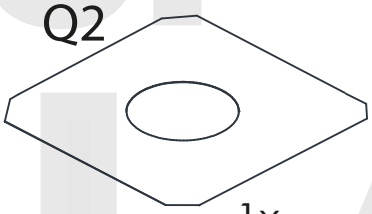

1x

Q5



2x

Q4

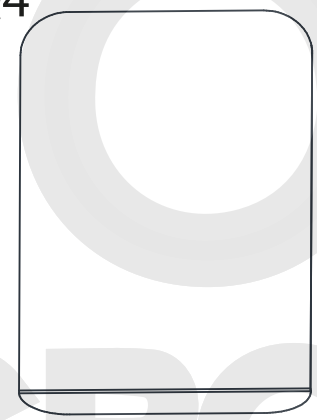

1x

ELECTRIC STOVE

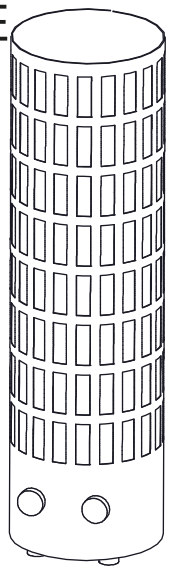

1x

G1

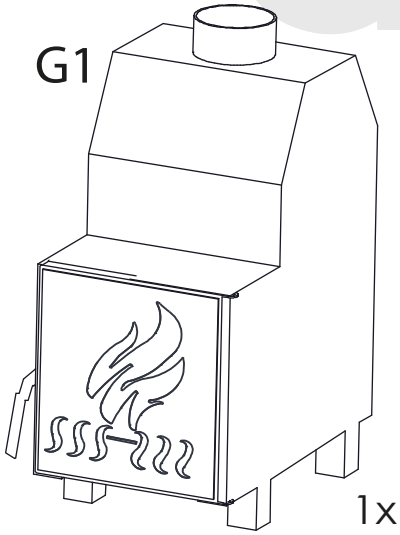

1x

G4

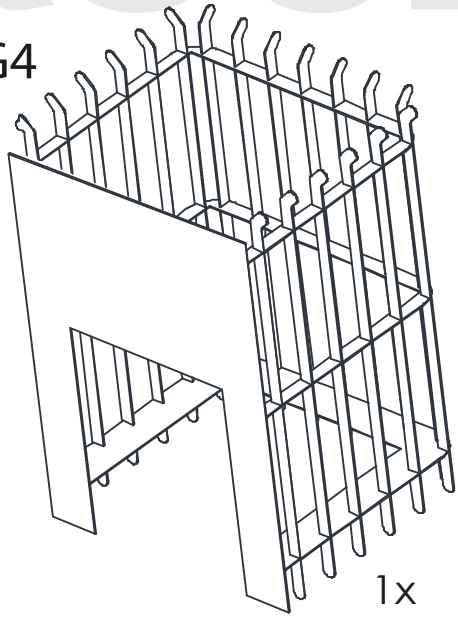

1x

G5

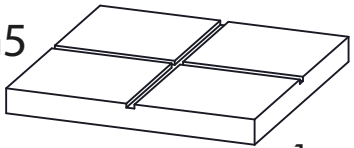

- for G1 only

1x

L1950 - 4

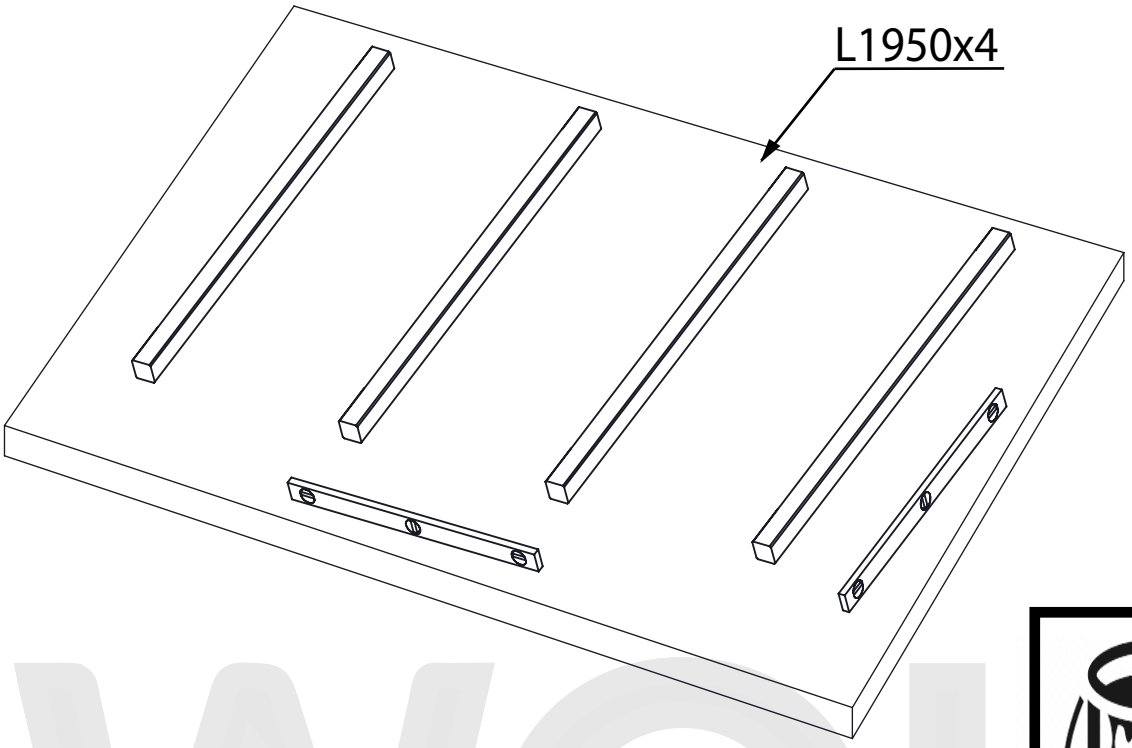

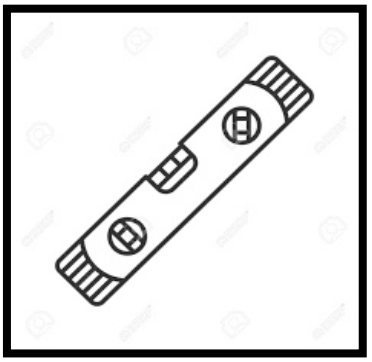

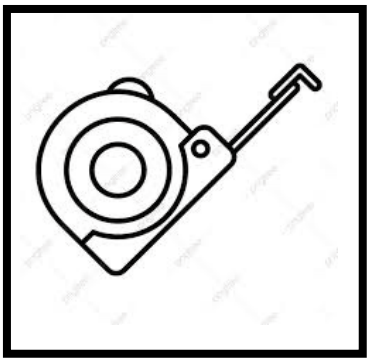

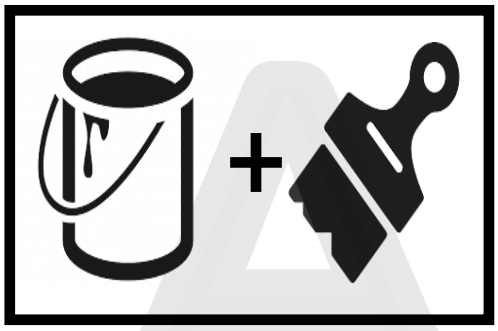

WOLA GROUP

ENTER

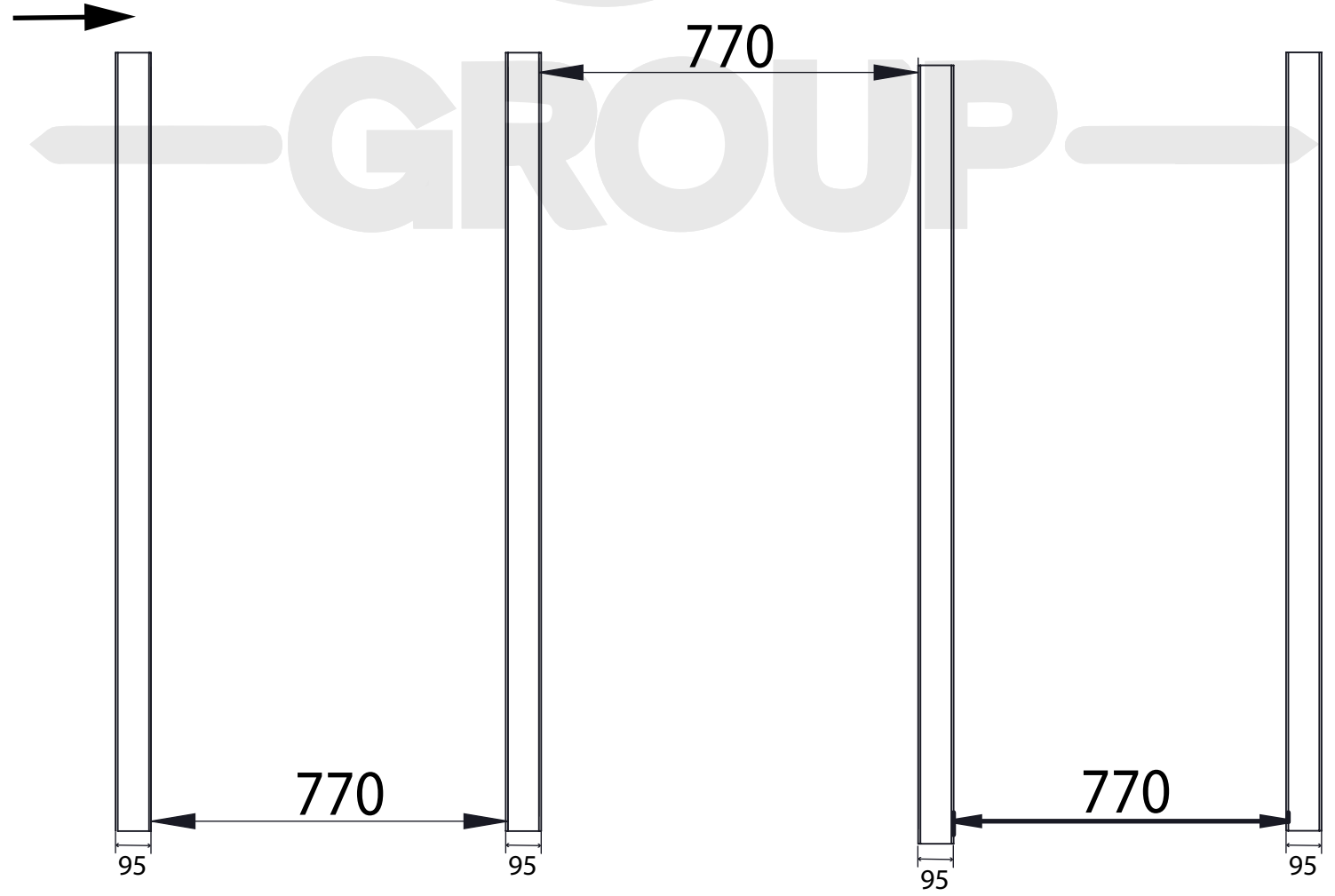

B31 - 1
B32 - 9
B33 - 9
4570 - 76
45120 - 90°



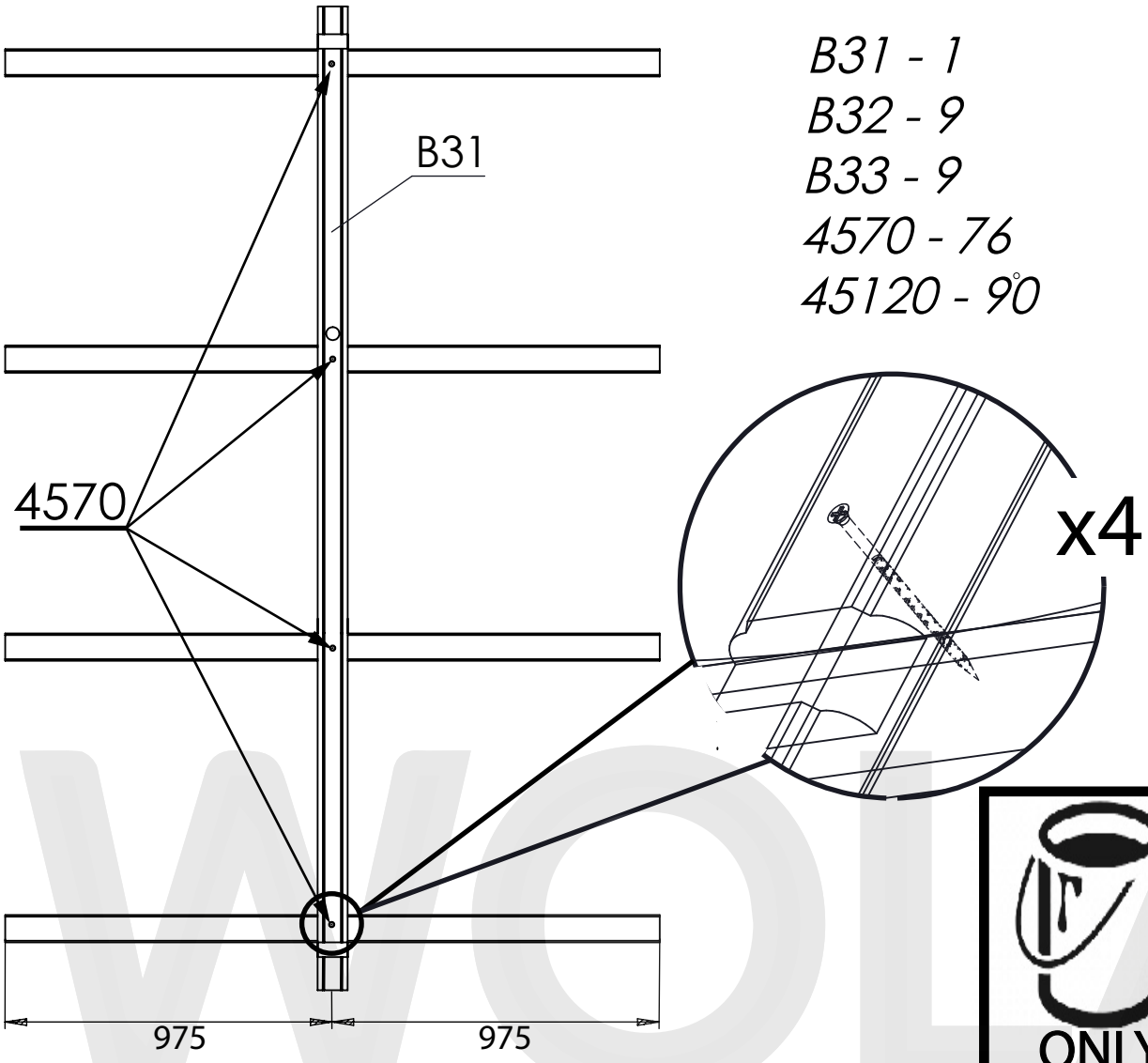





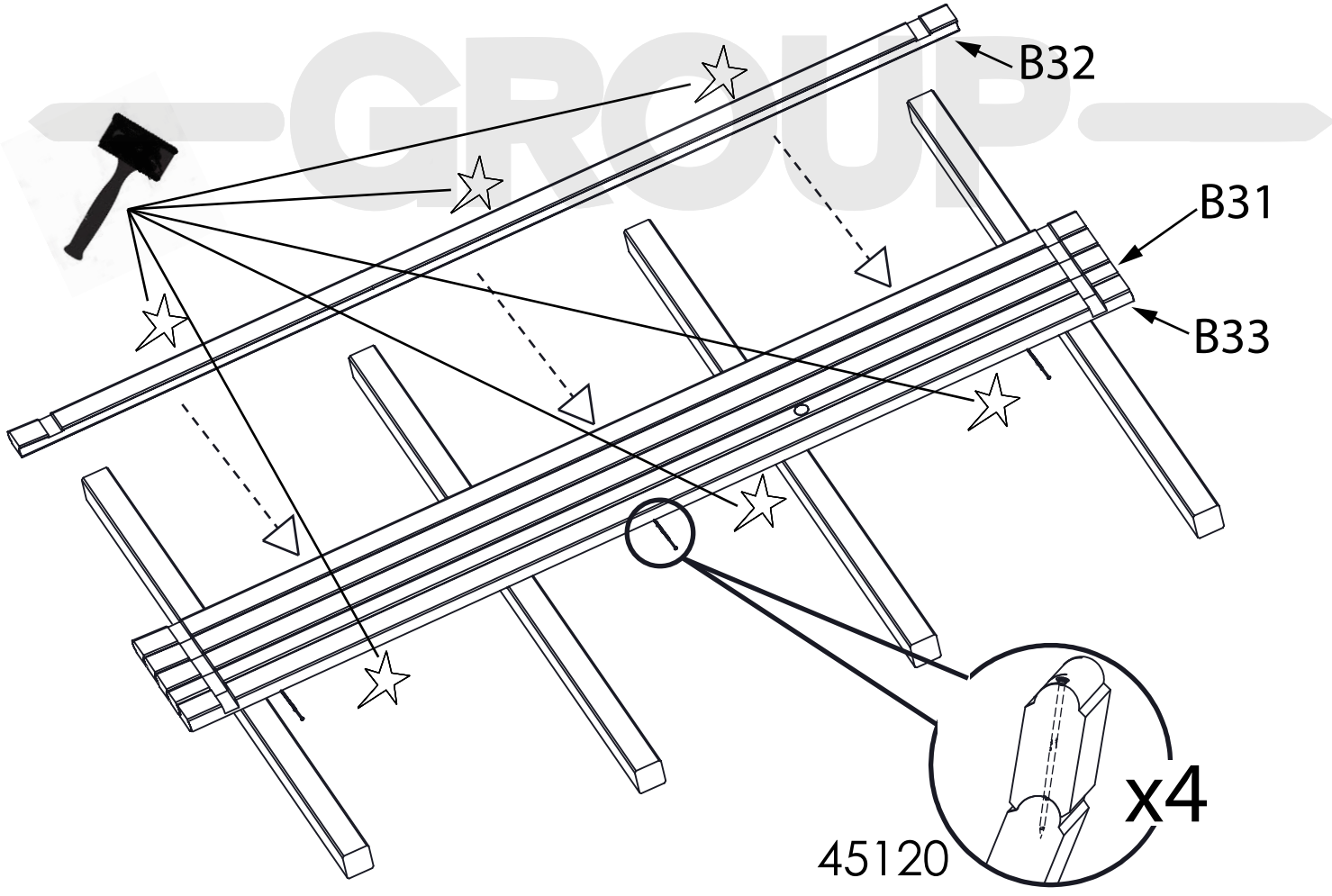

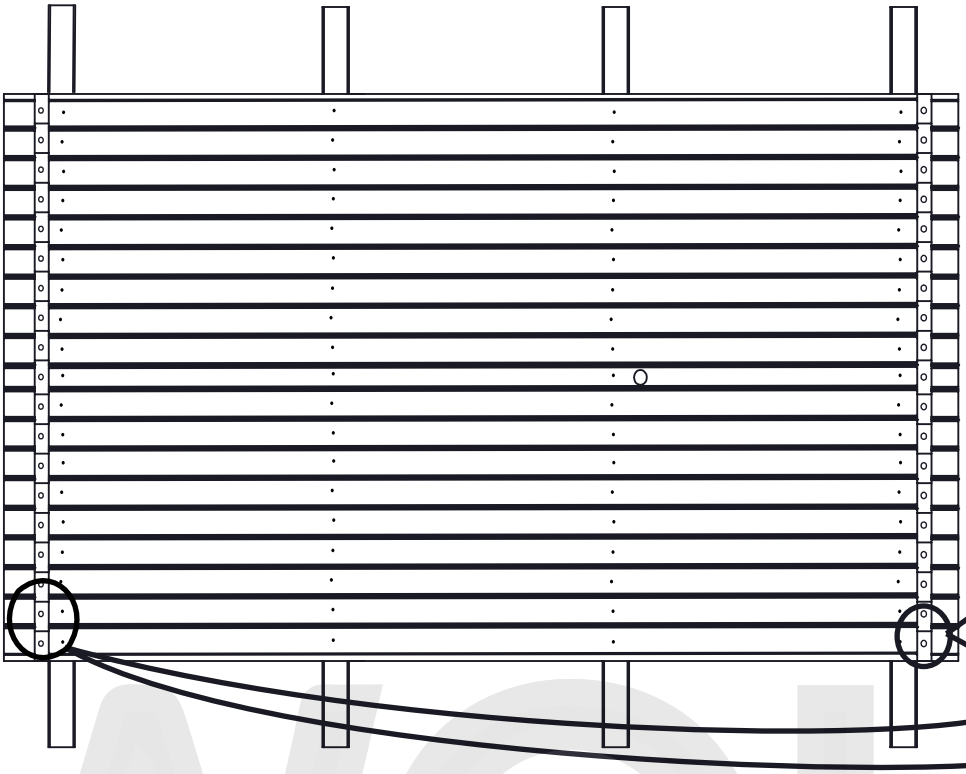



C41 - 1
C43 - 1
4570 - 4

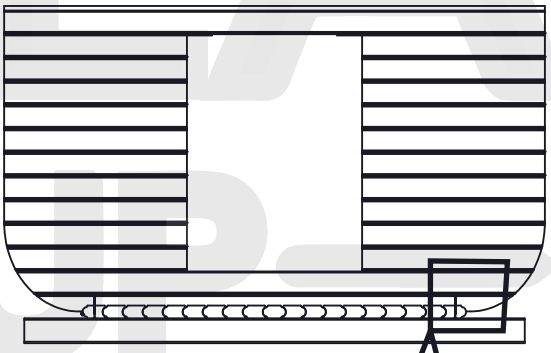

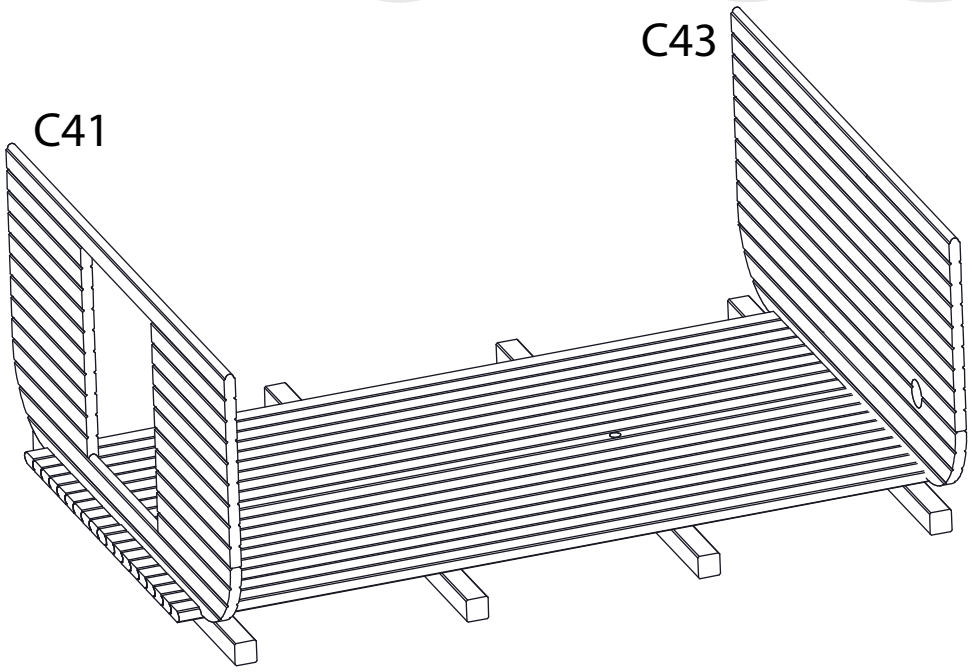

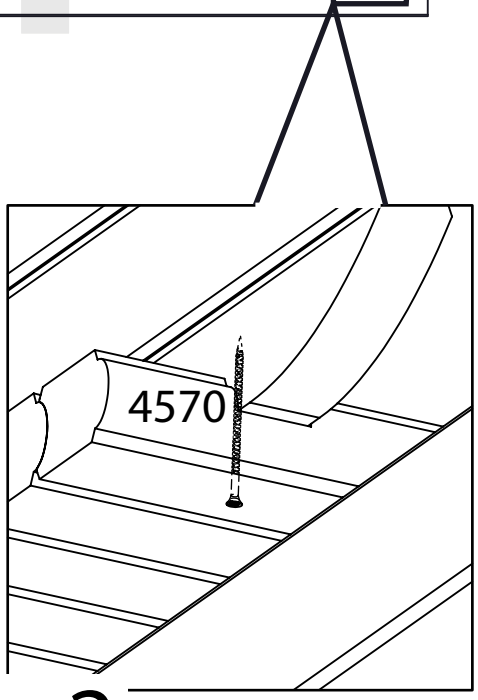

x2

C42 - 2
C44 - 1
B32 - 14
B33 - 14
4570 - 62
45120 - 112

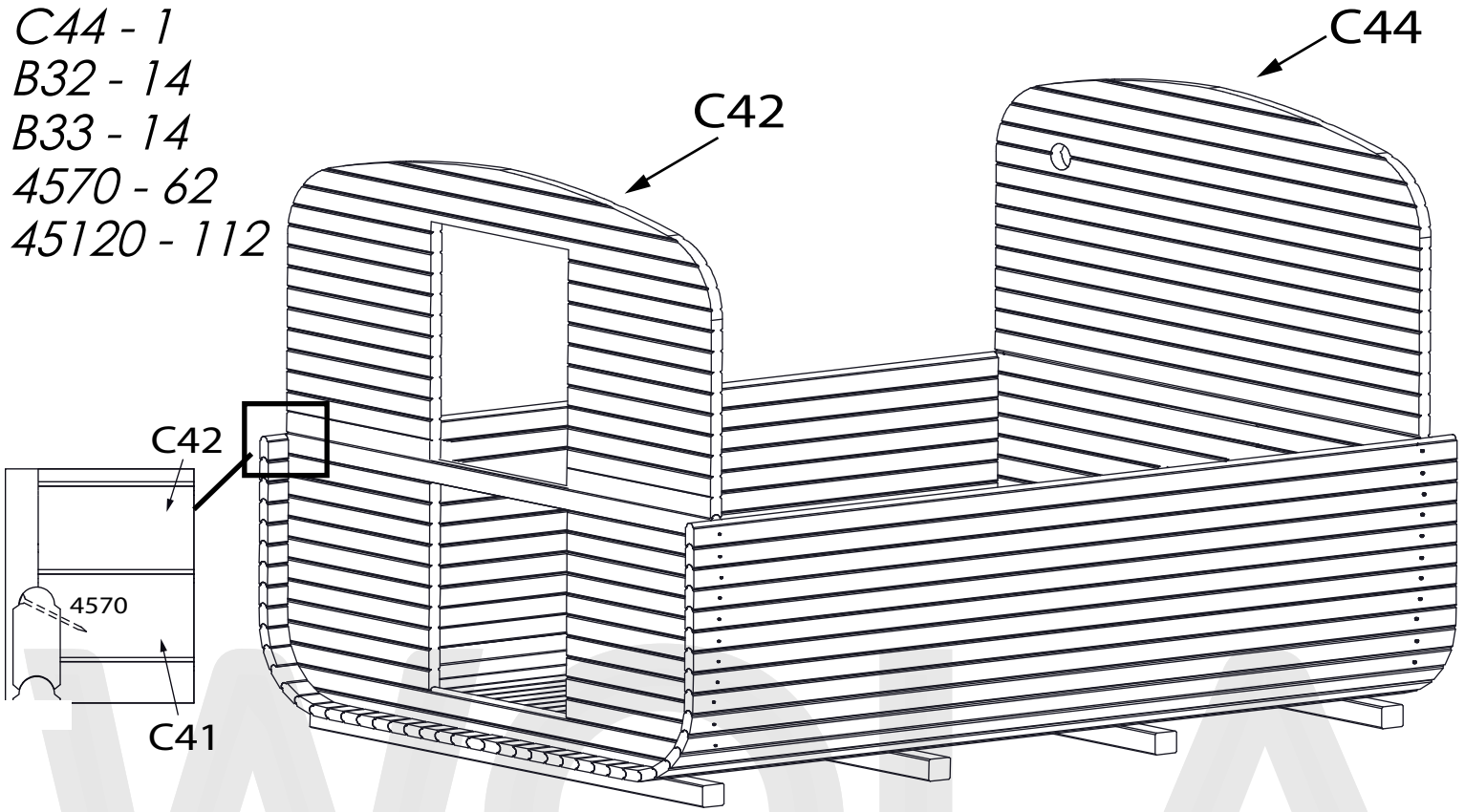

for panorama installing see **Appendix 2**

B32 - 25
B33 - 25
4570 - 150
45120 - 200

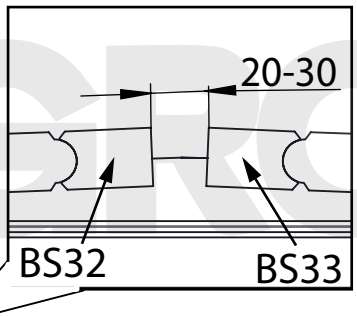



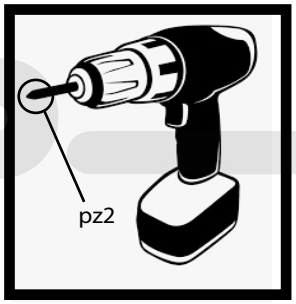

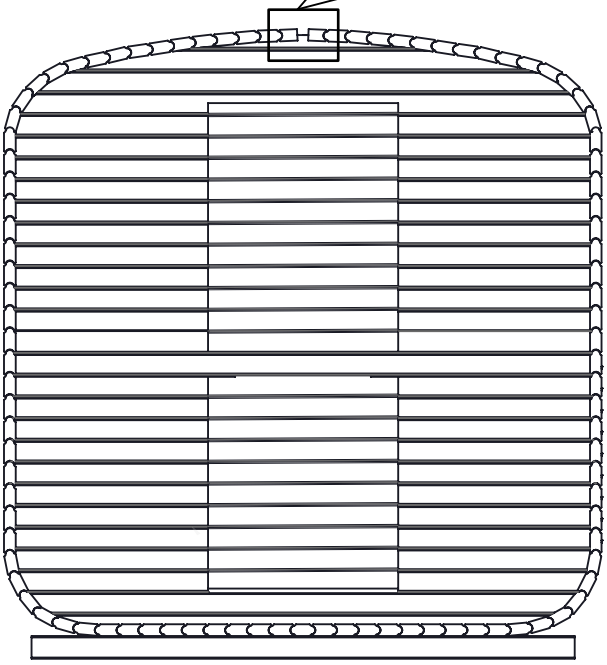

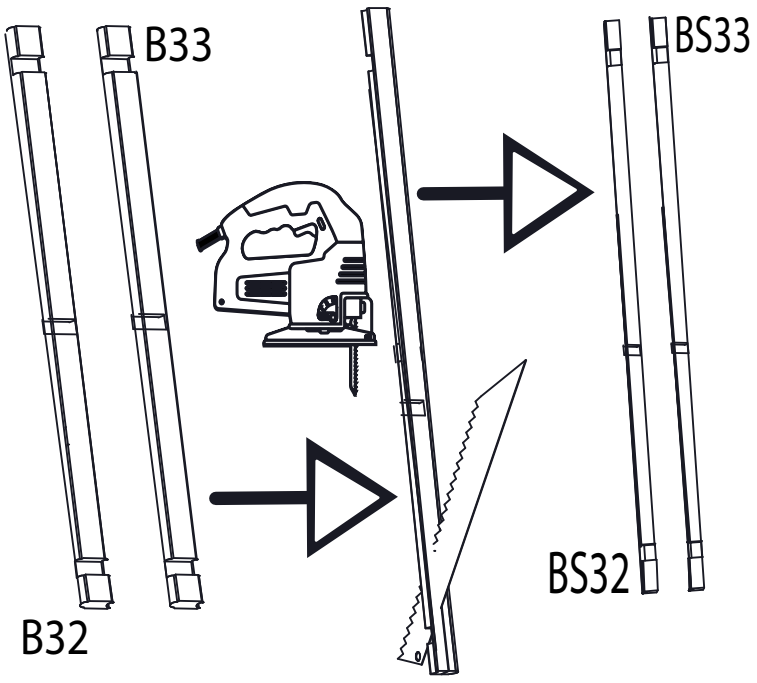

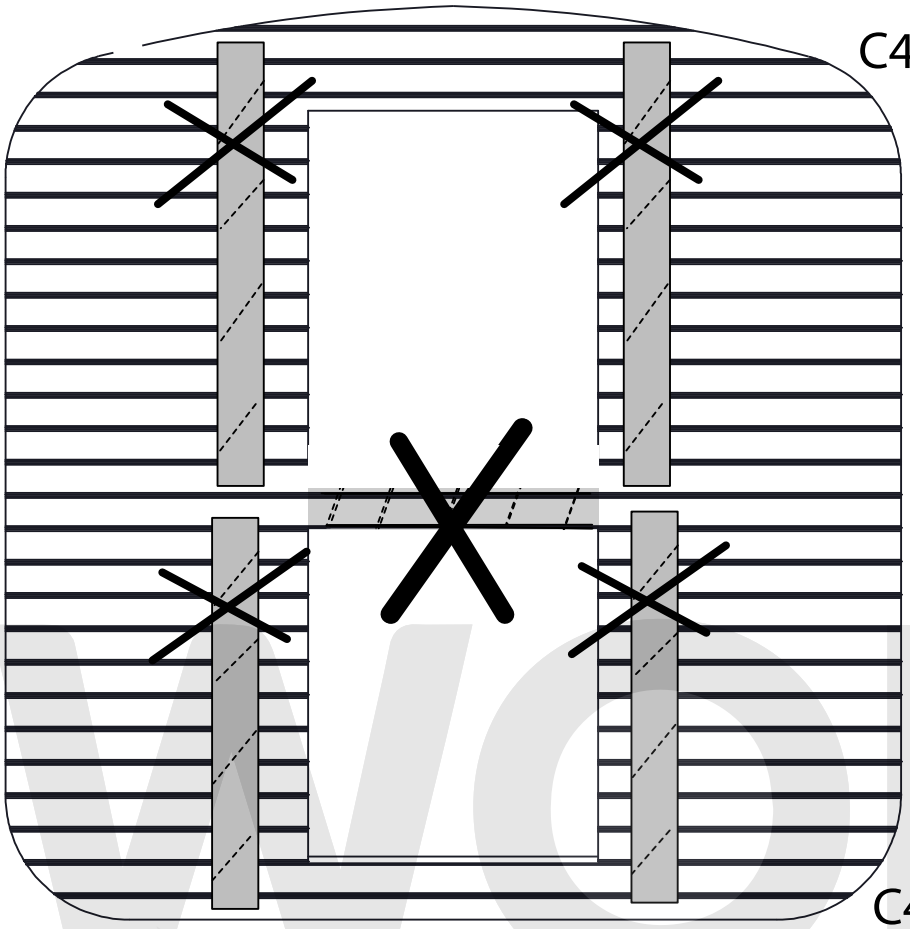

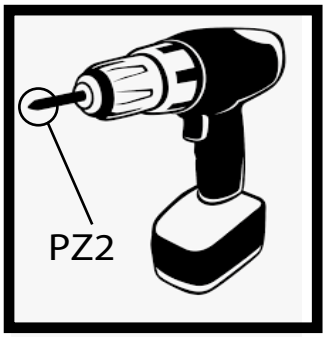



Q1 - 1
4345 - 4

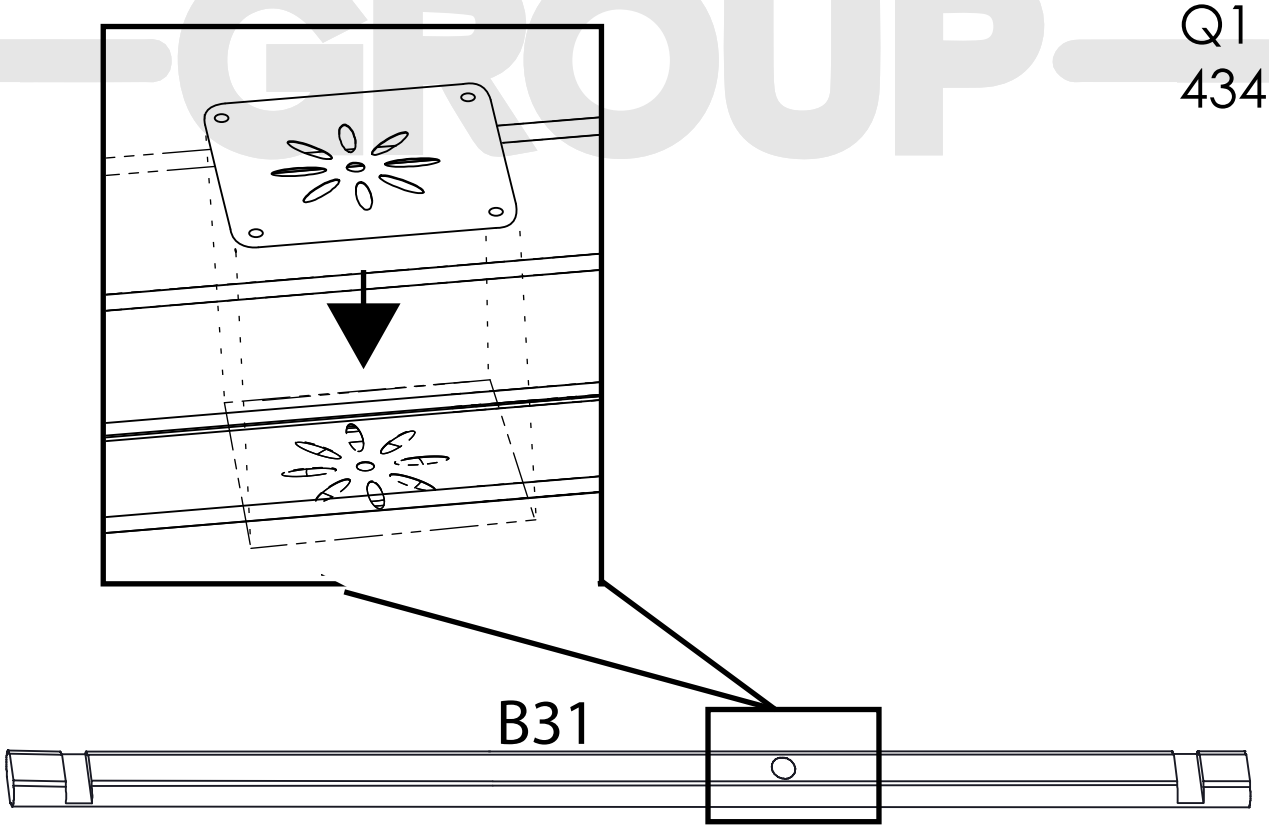

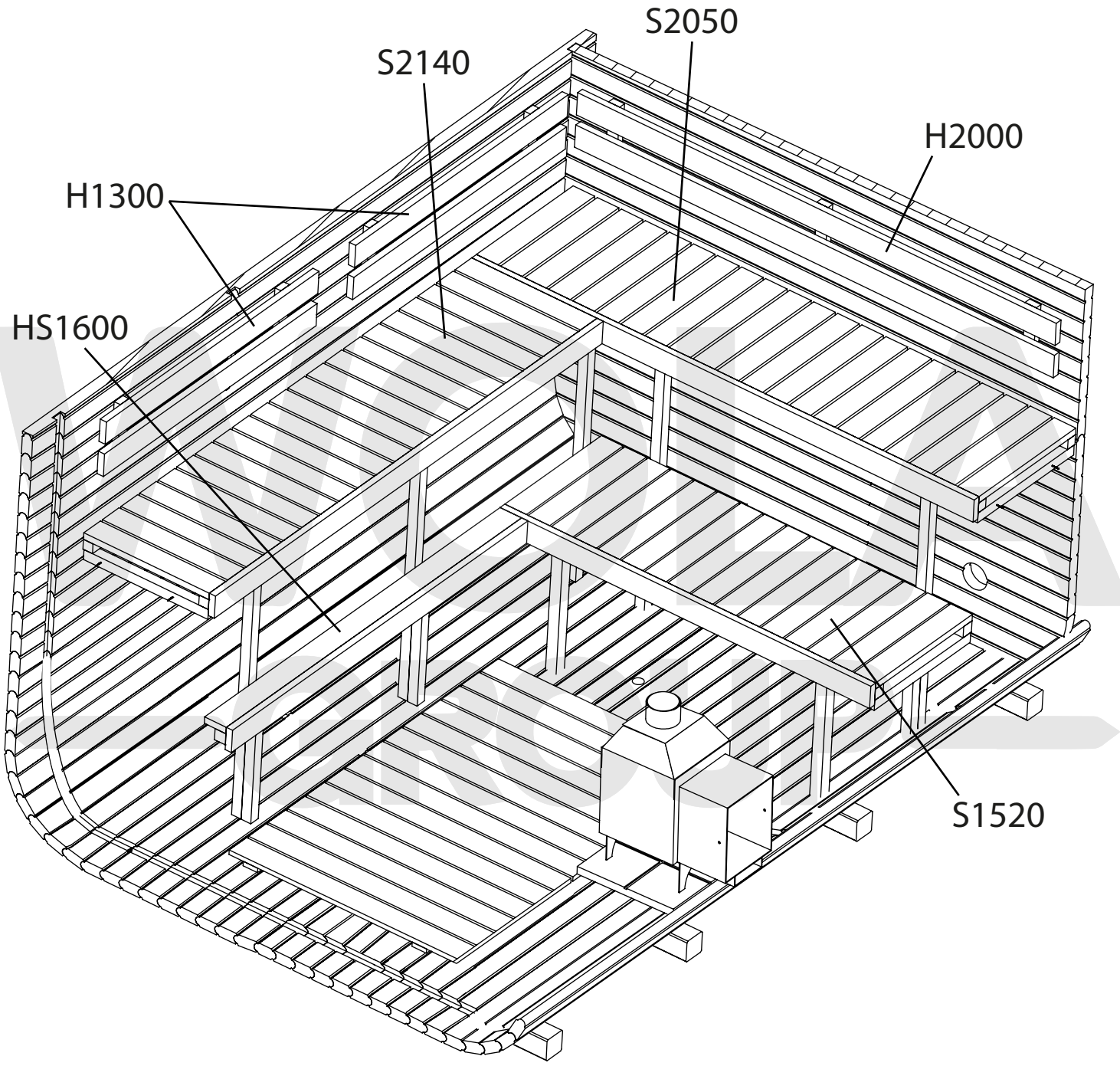
S2050
S2140
H2000
H1300
HS1600
S1520





SET3

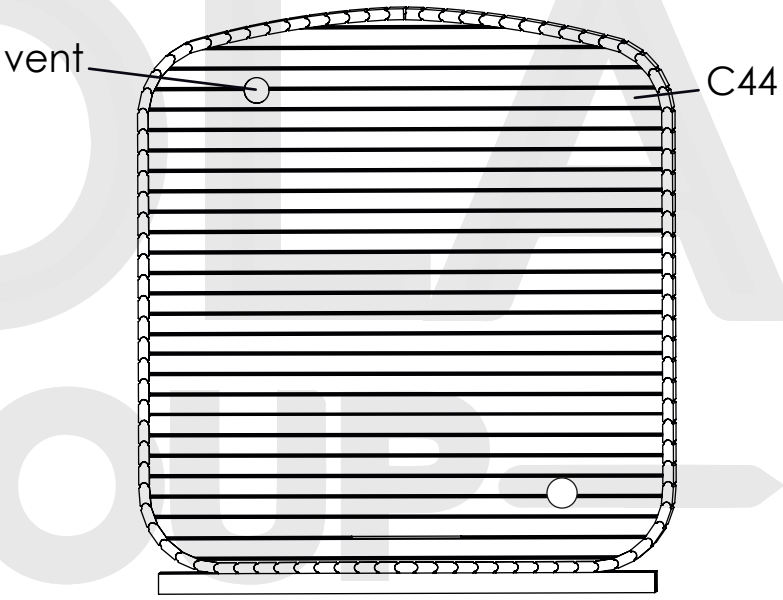

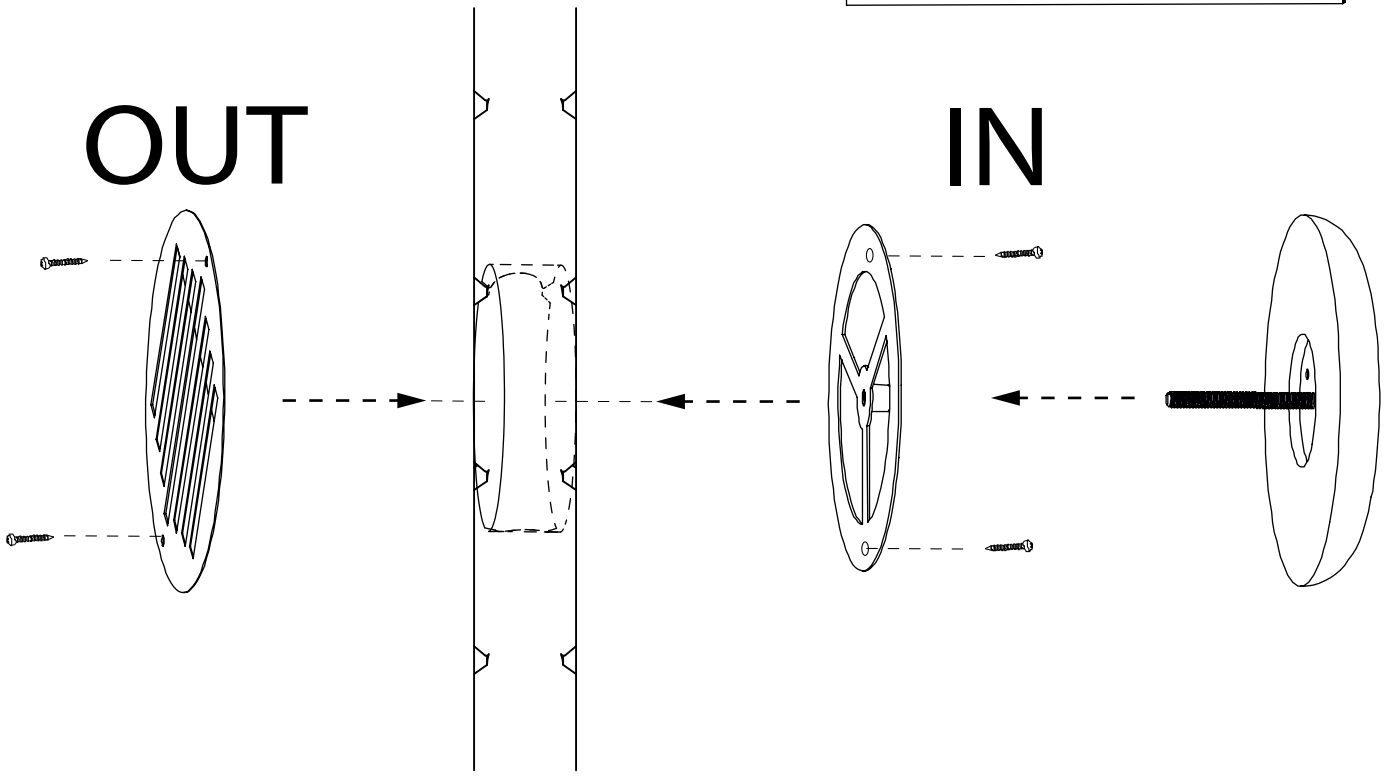

WOLA GROUP

H2000 - 1
S2050 - 1
R520 - 4
R1000 - 2
4570 - 18

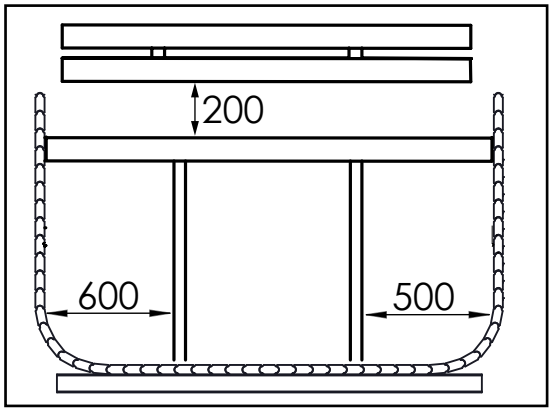

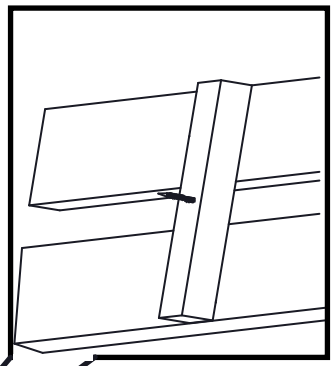

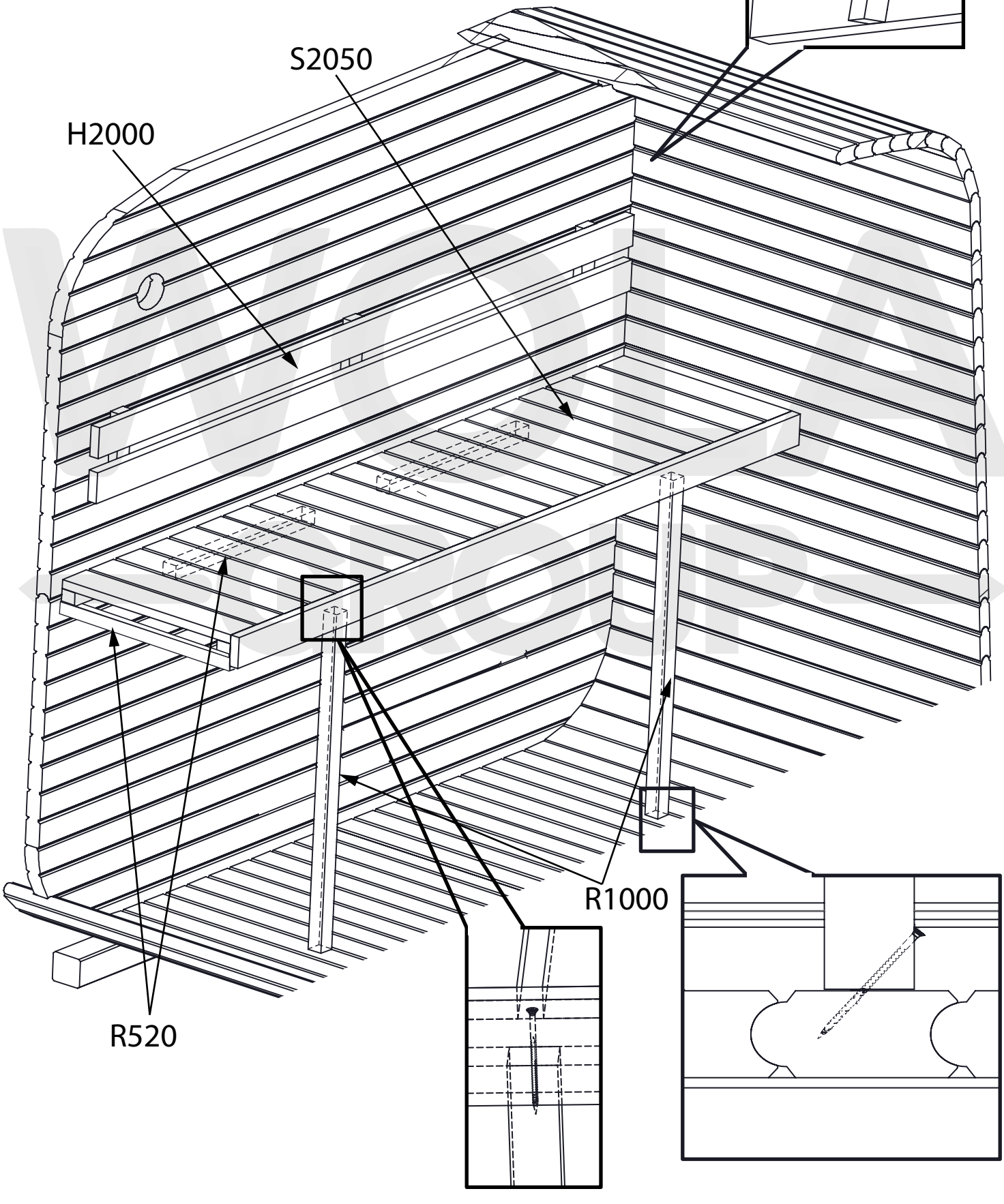

H1300 - 2
S1520 - 1
HS1600 - 1
R520 - 11
R1000 - 3
4570 - 30



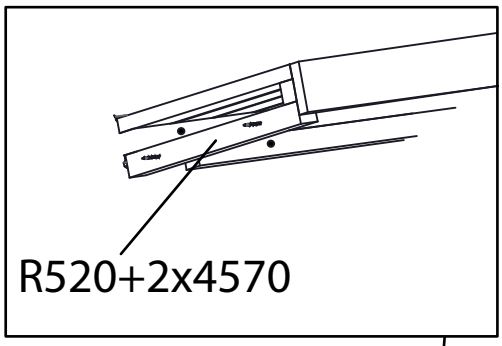

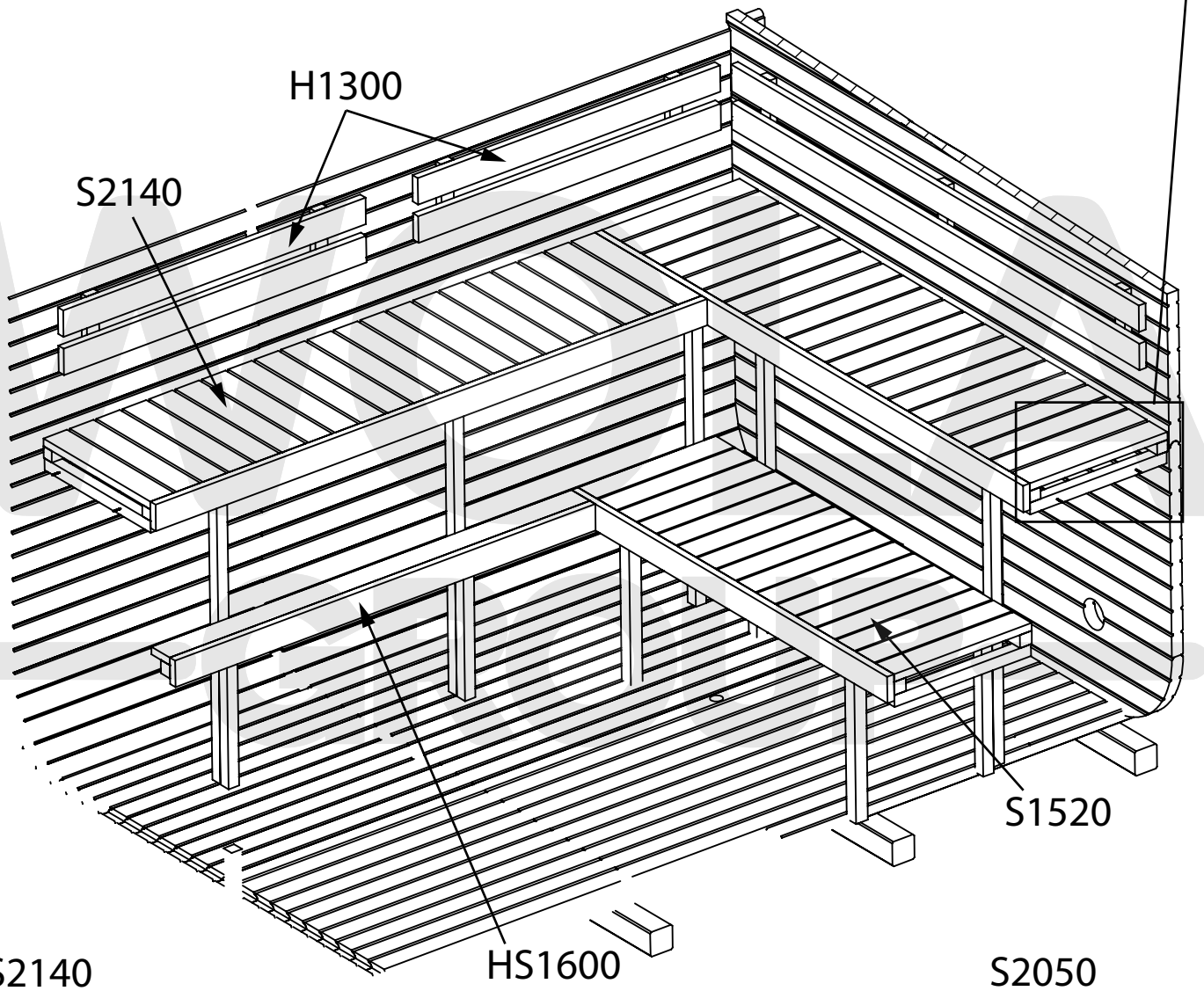

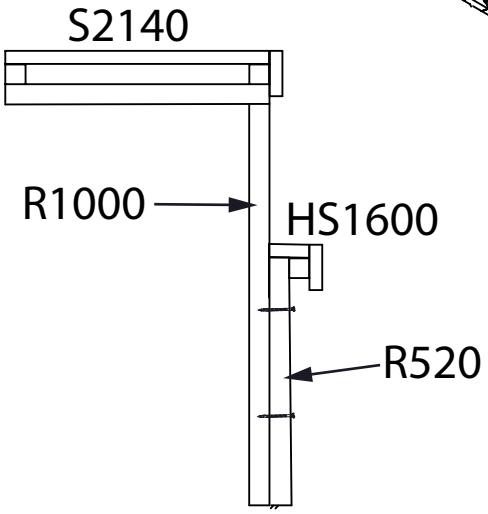

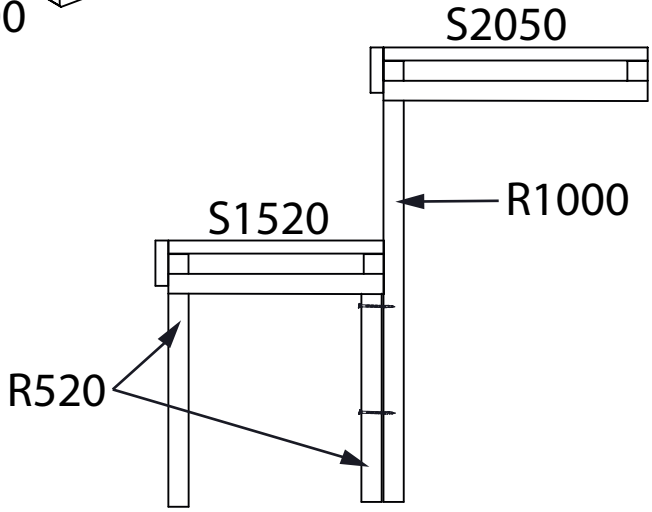

W1350 -2
W80 - 4
4345 - 22

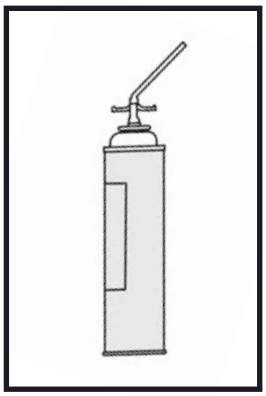

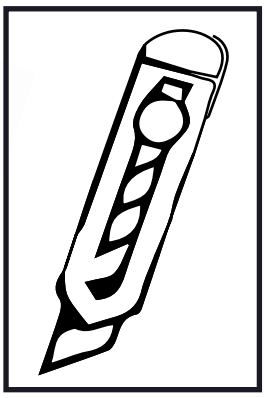

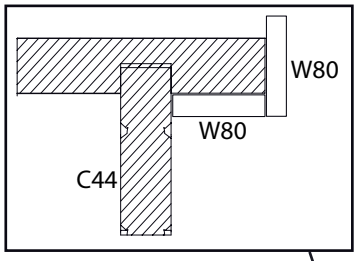

W1350+4345x6

W1350+4345x6

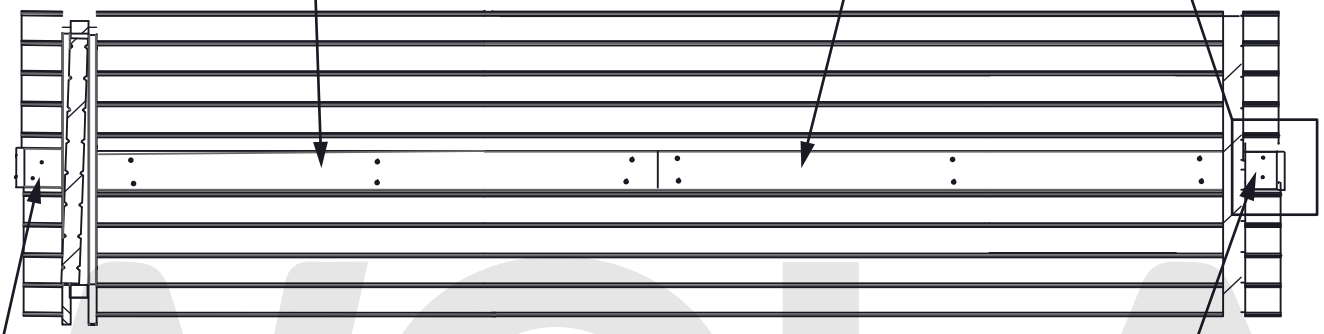

W80+4345x2

W80+4345x2

W80+4345x2

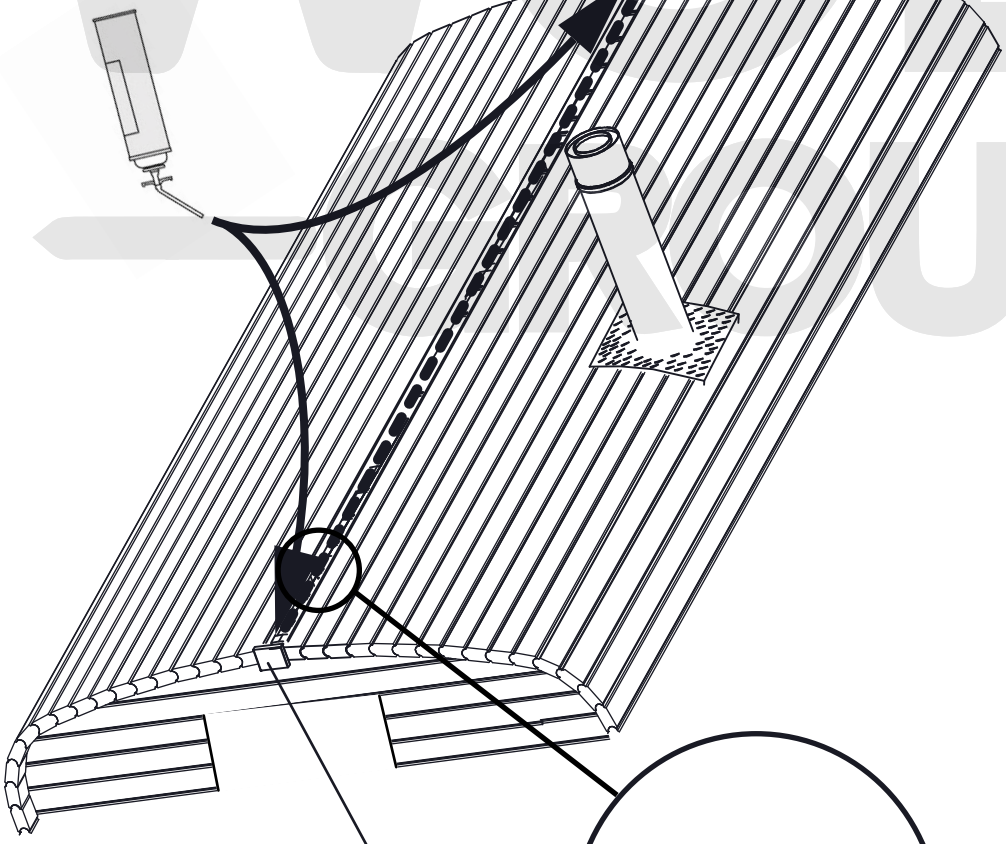

W80+4345x2

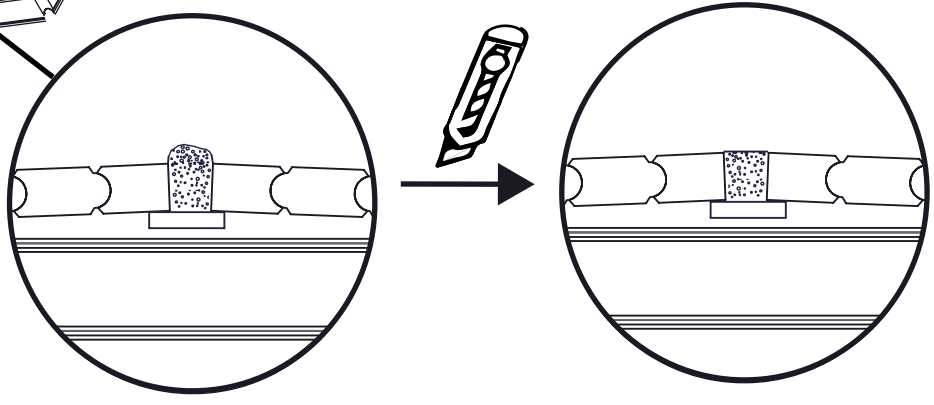

L60 - 4
K60 - 8
2012 - 8
732012 - 4





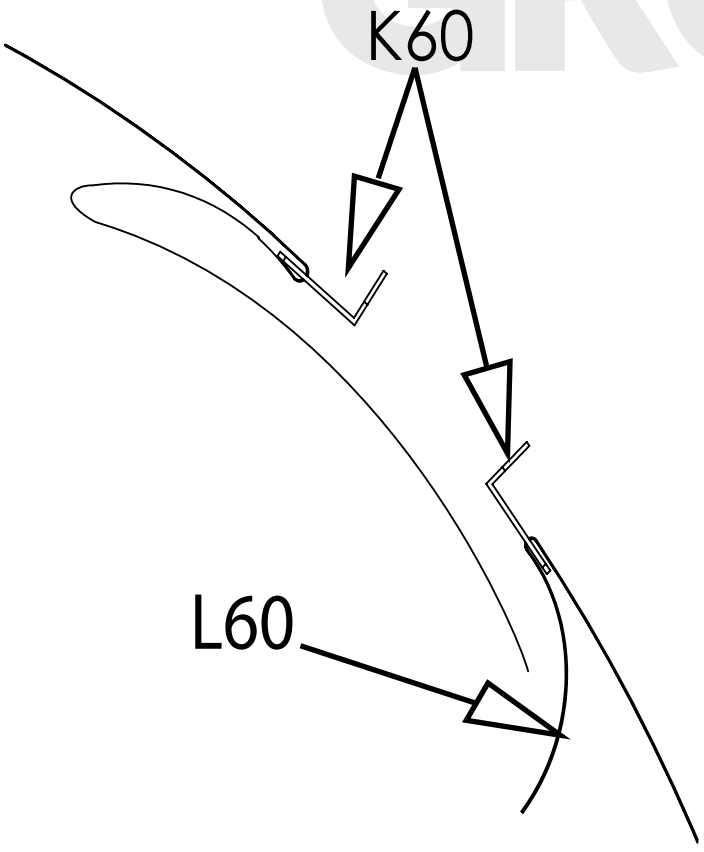

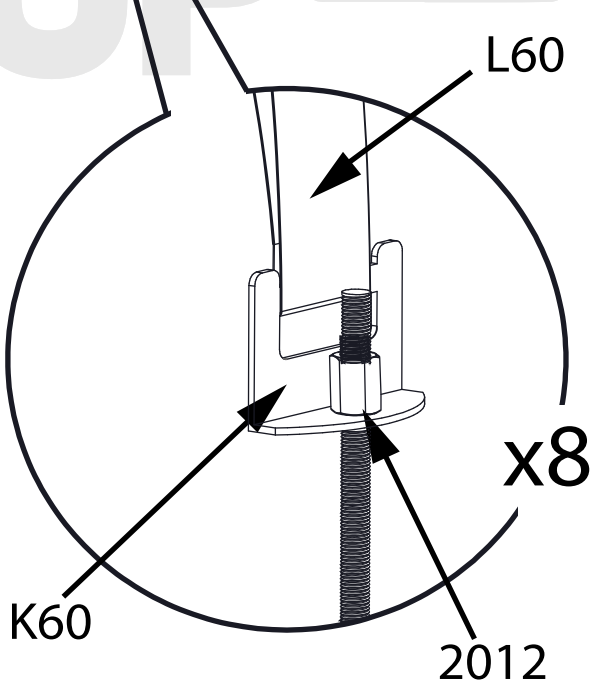

DG1800 - 1
4570 - 8
J - 8

DOOR INSTALATION
outside view

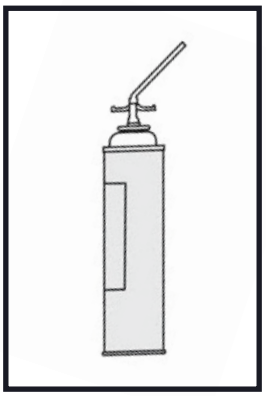

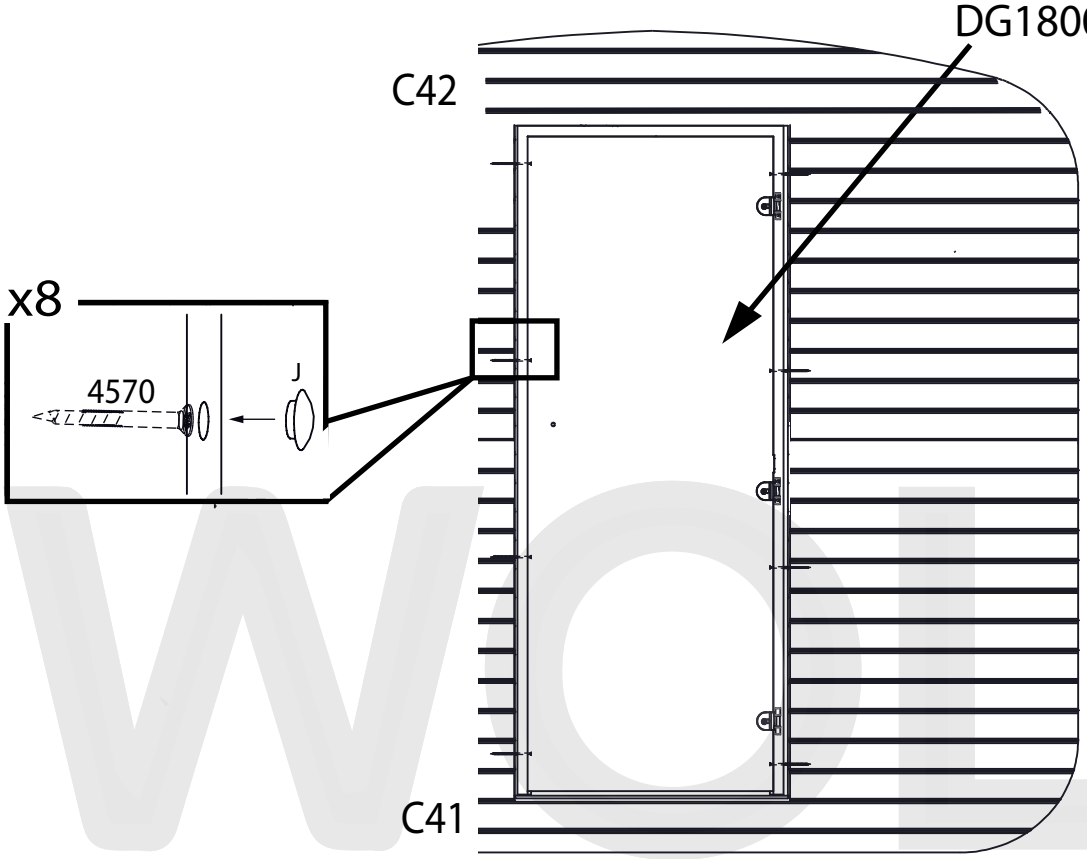

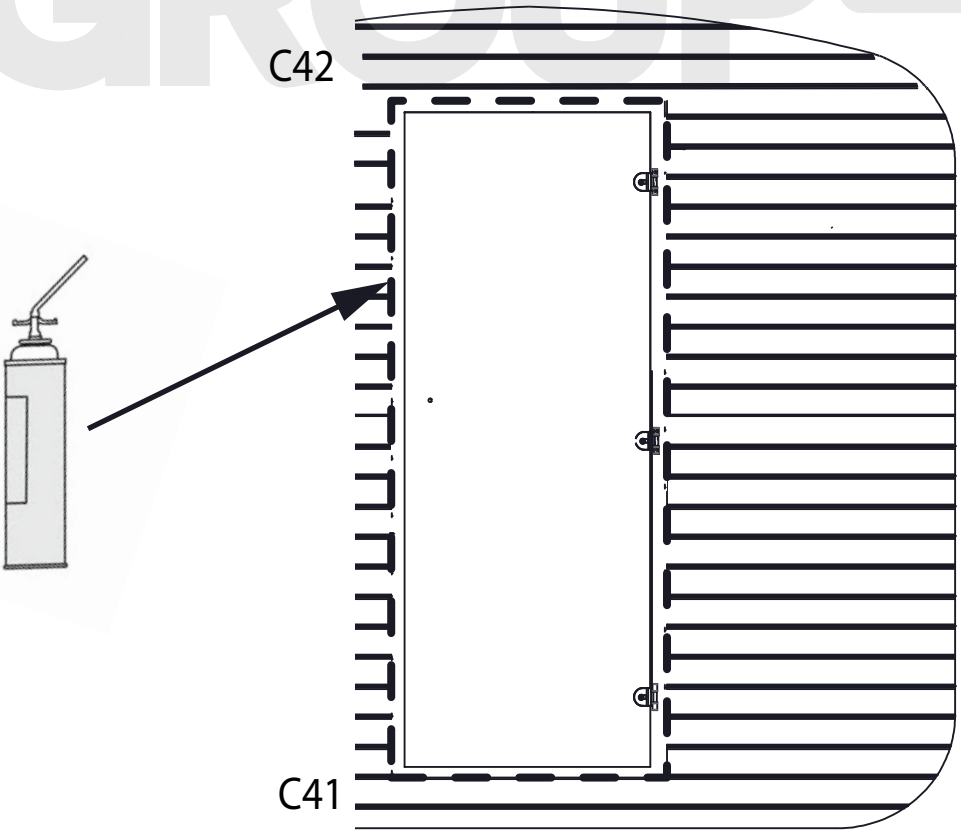

W1800 - 2
W840 - 1
4345 - 16

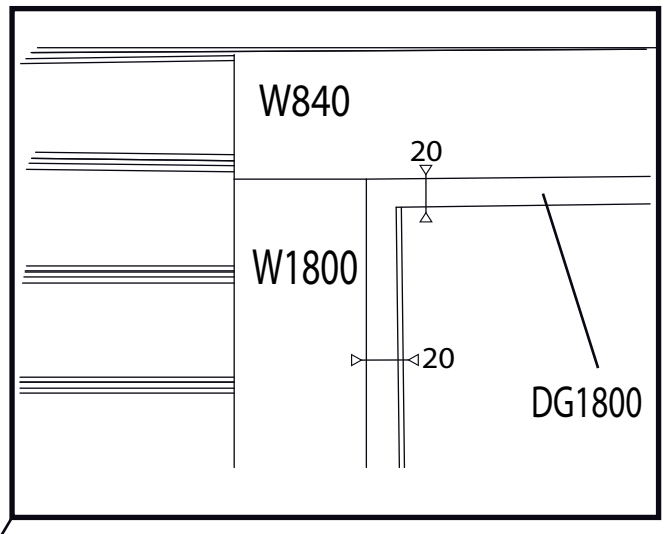

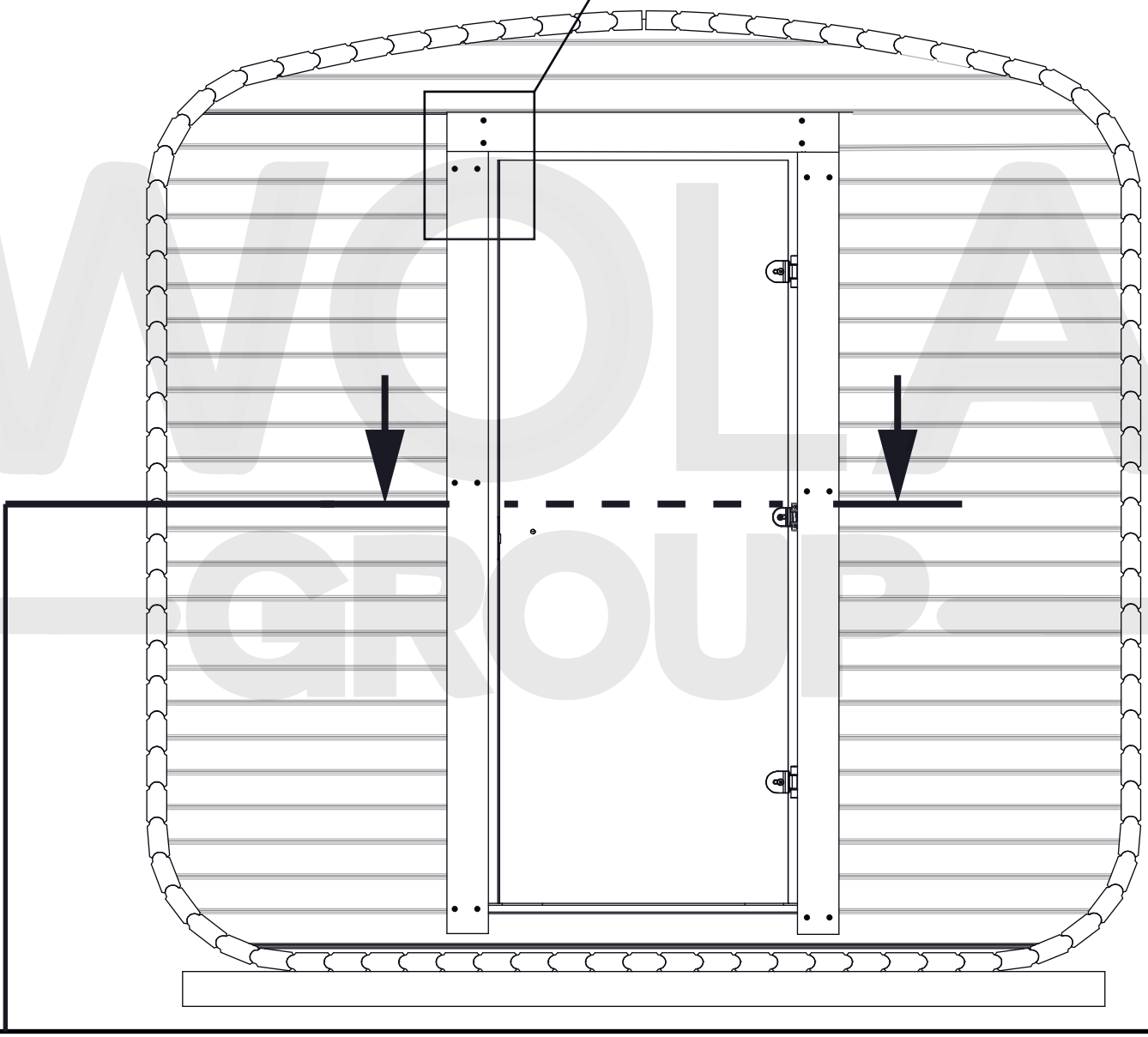

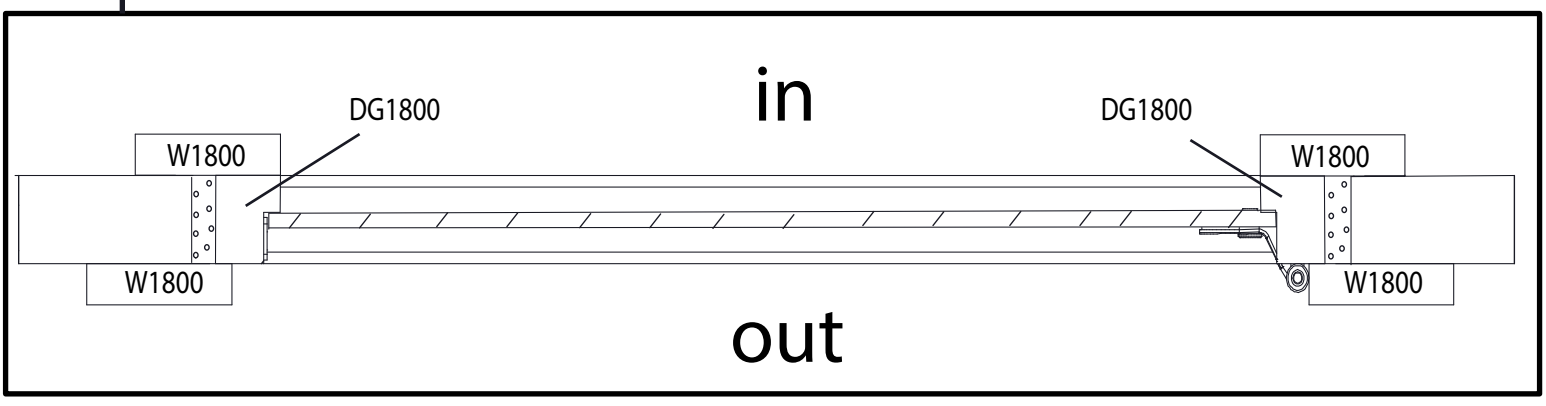

W840 - 1
W1800 - 2
4345 - 16

DOOR INSTALATION
inside view

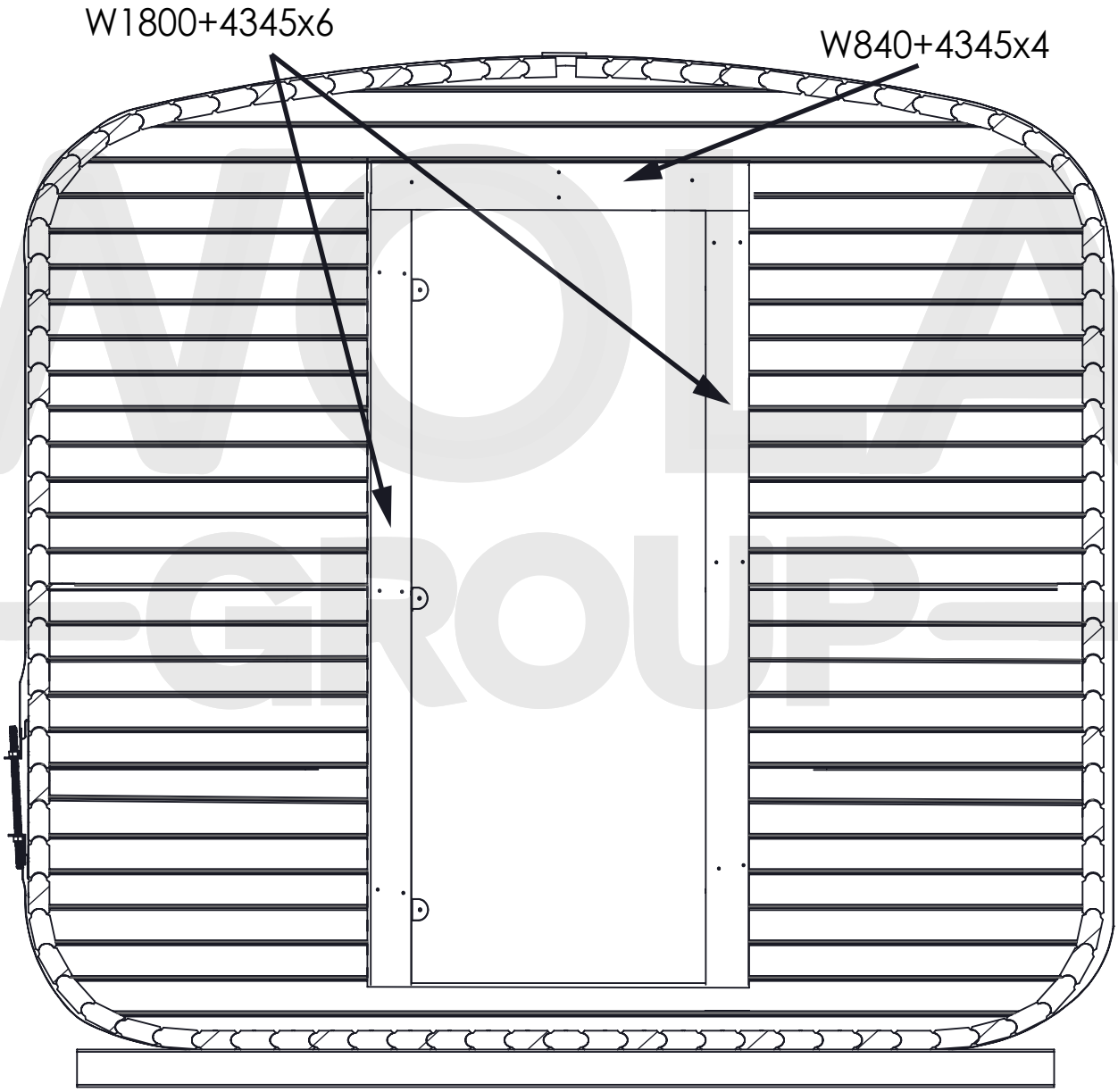

SET 2

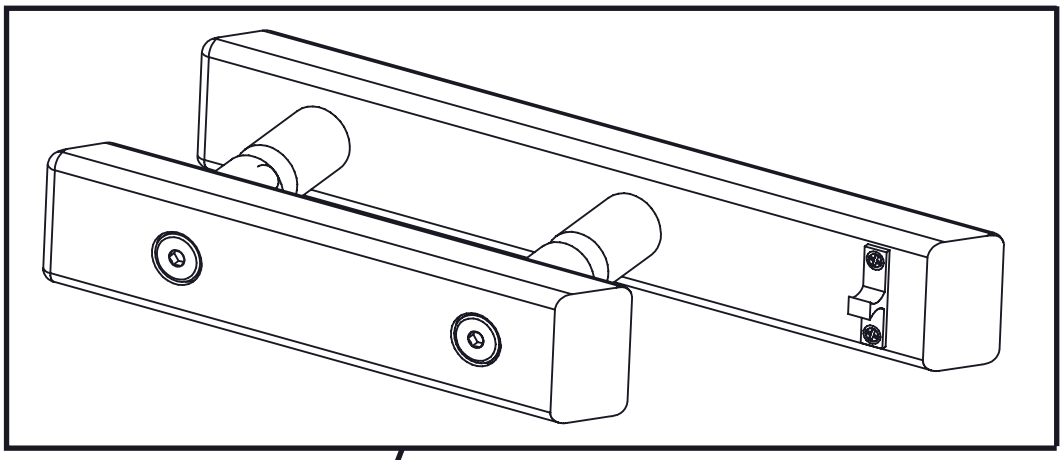

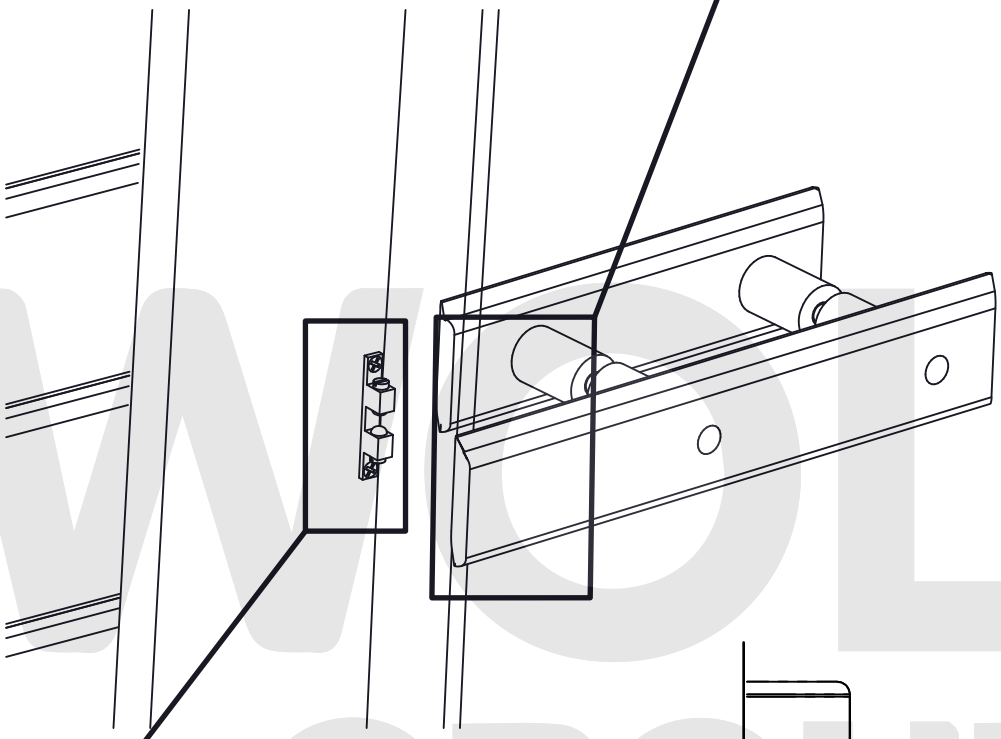

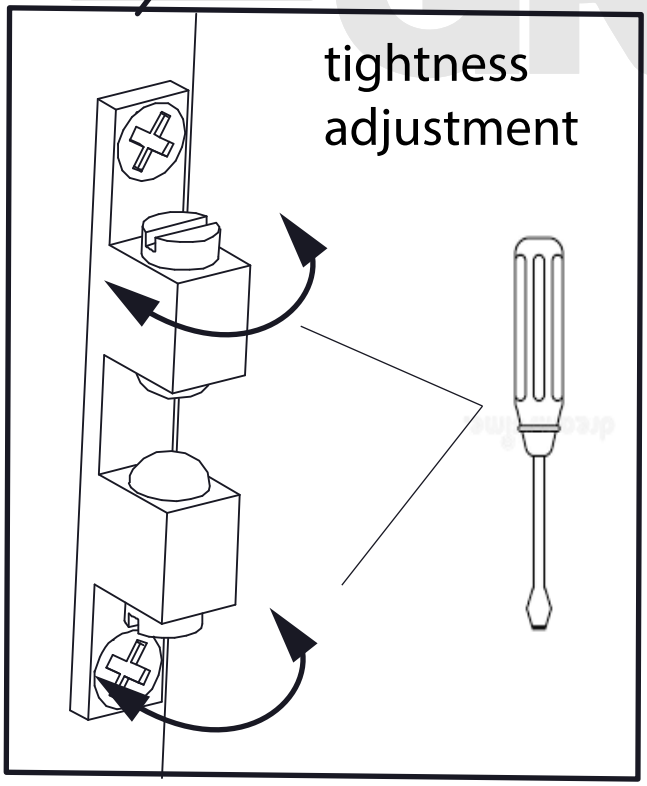

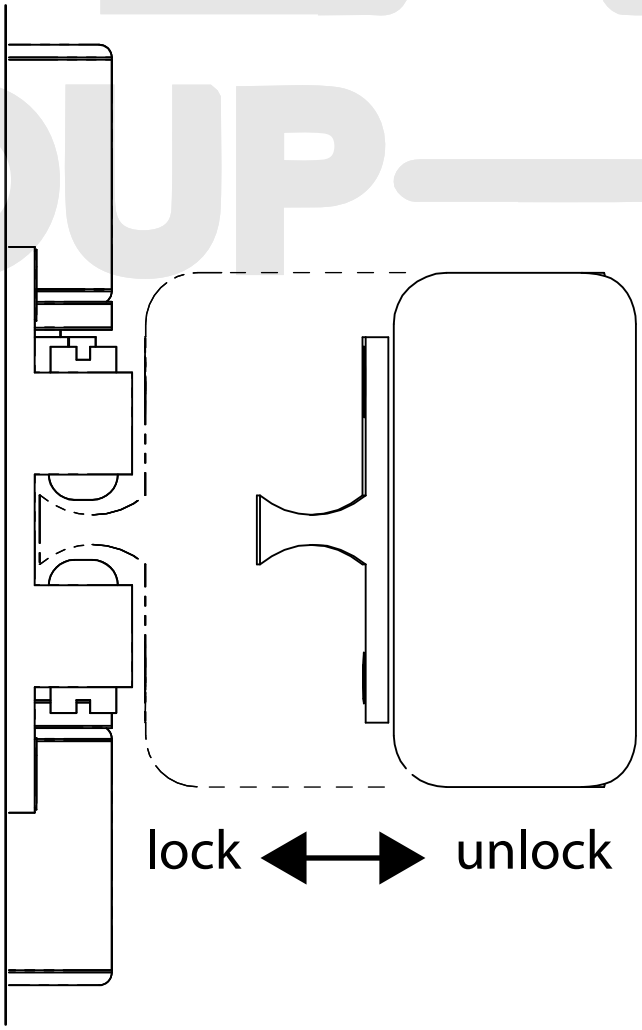

Appendix 1
ROOF FASTENING

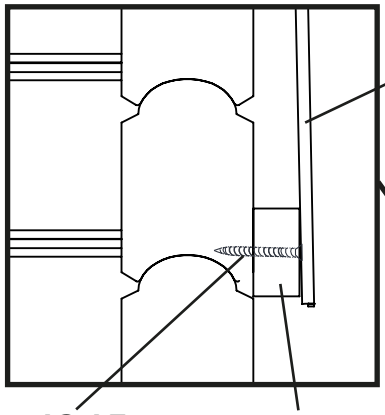





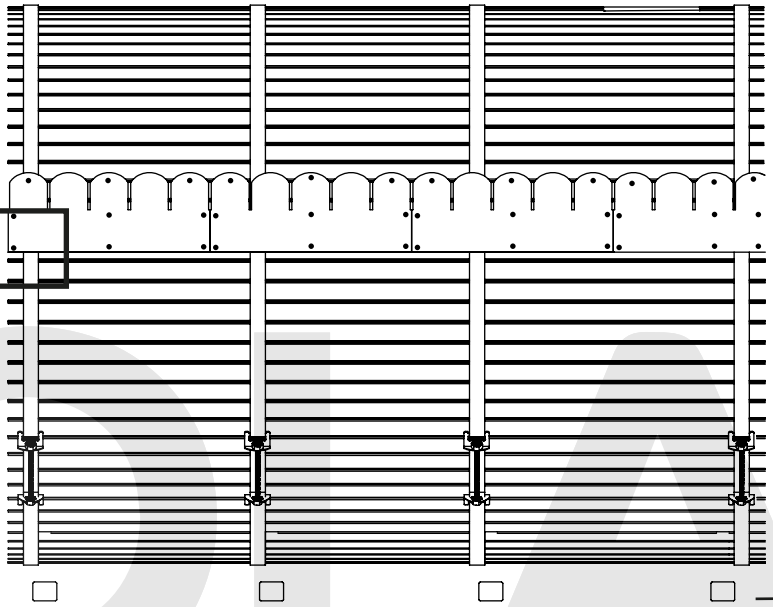

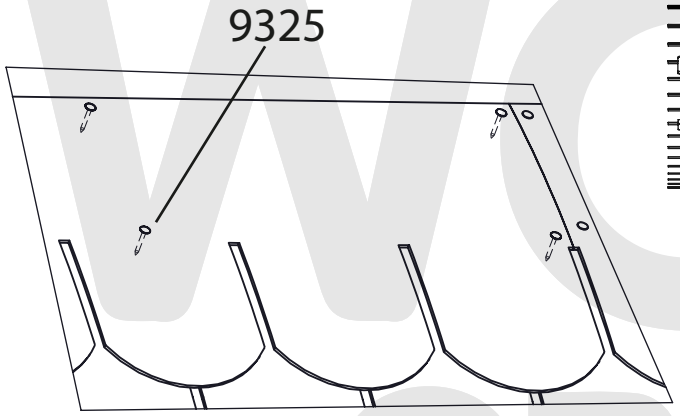

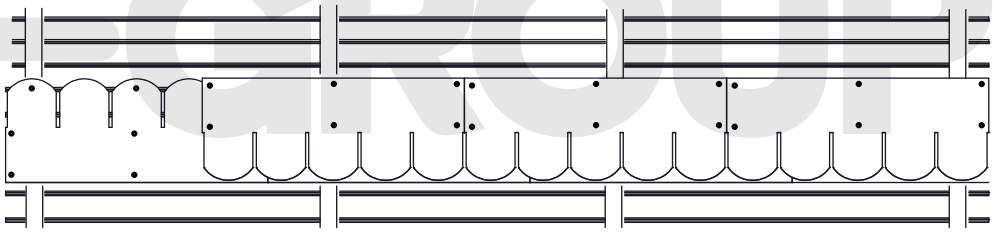

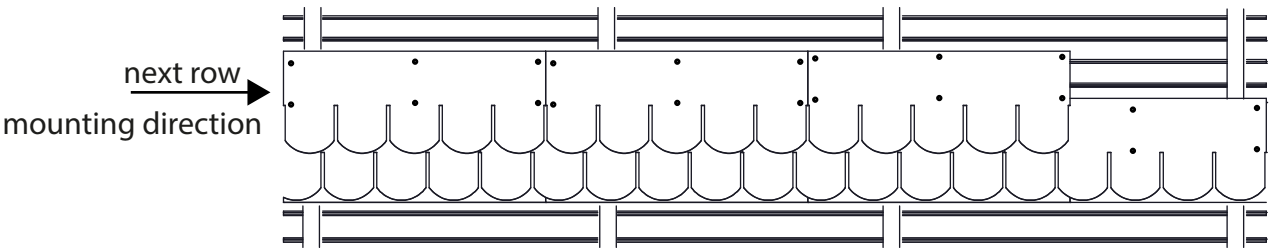

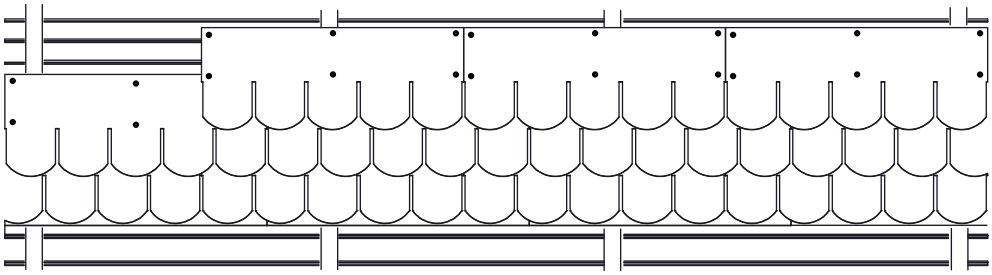

QUADRO SAUNA COVERING

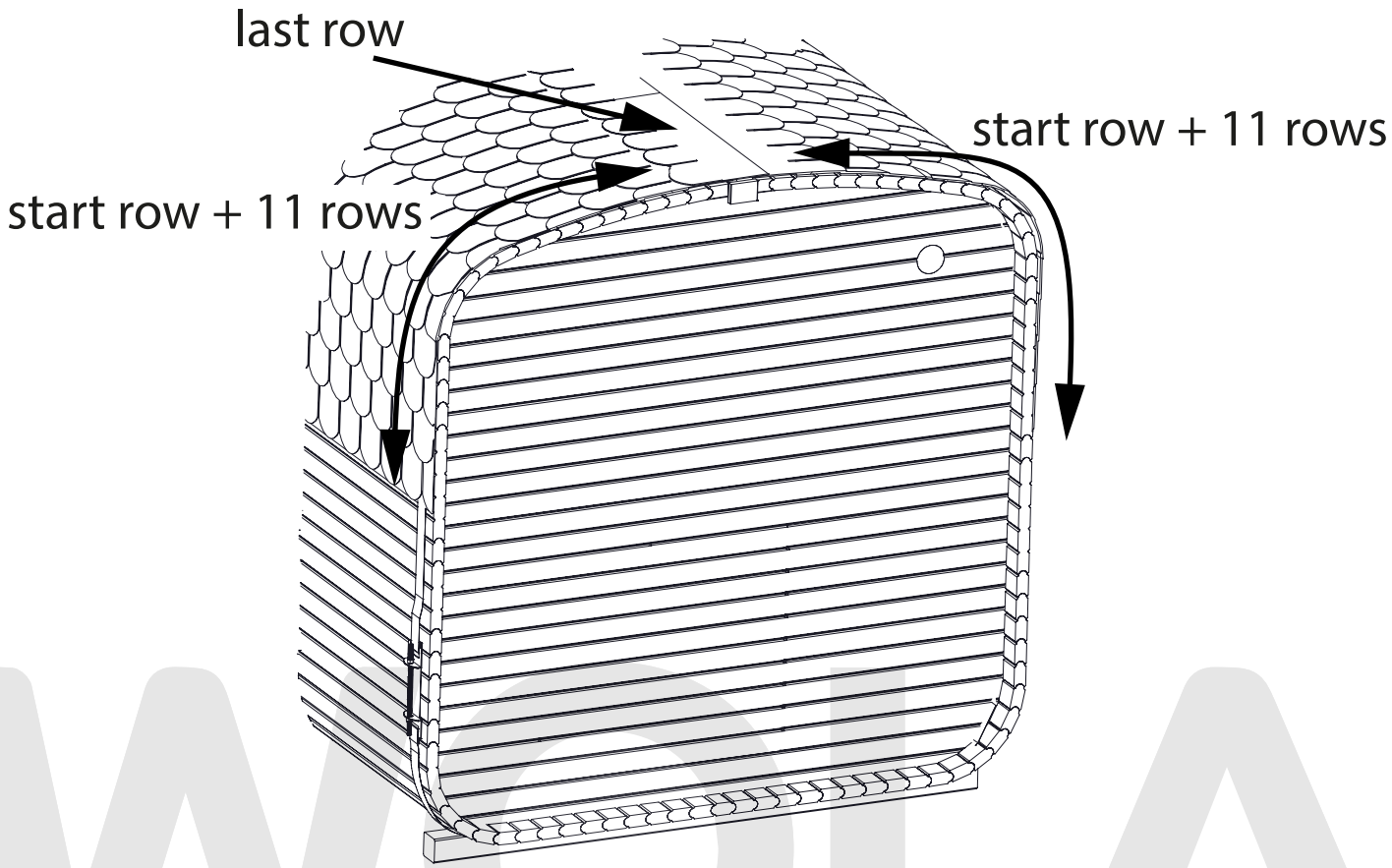

QUADRO SAUNA JOINTS SEALING

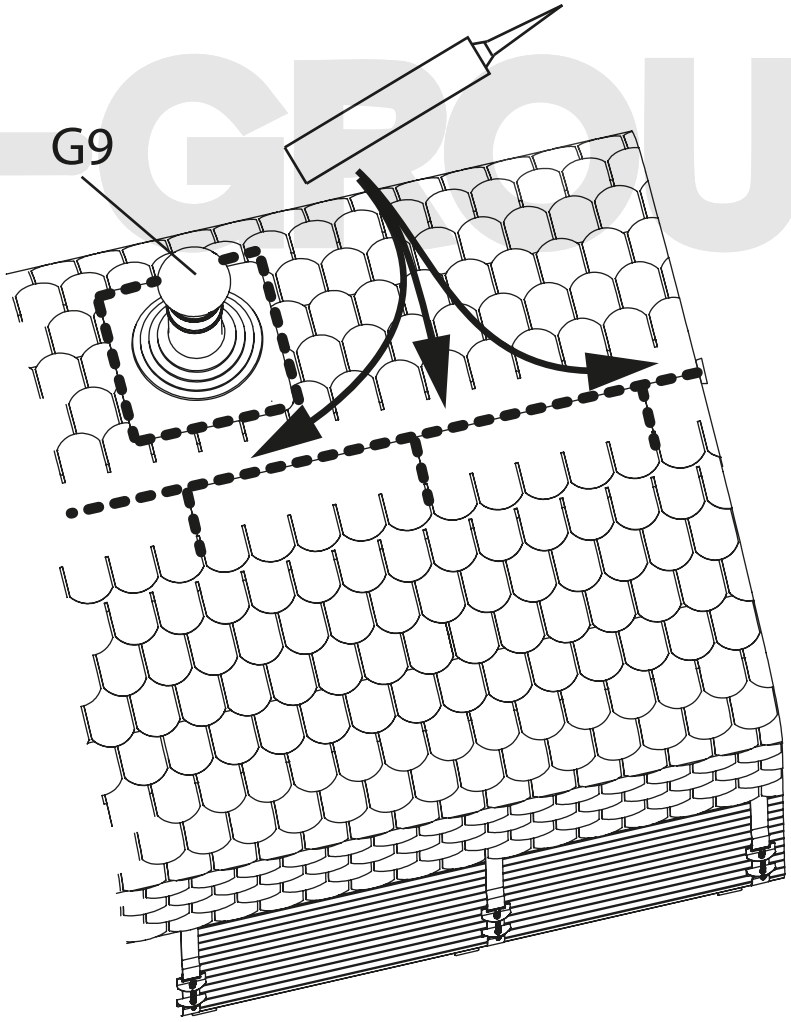

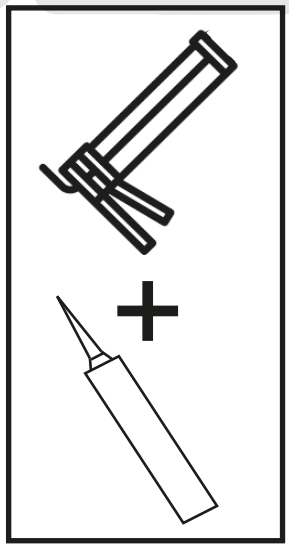

WOLA GROUP

Appendix 2
PANORAMA INSTALLING

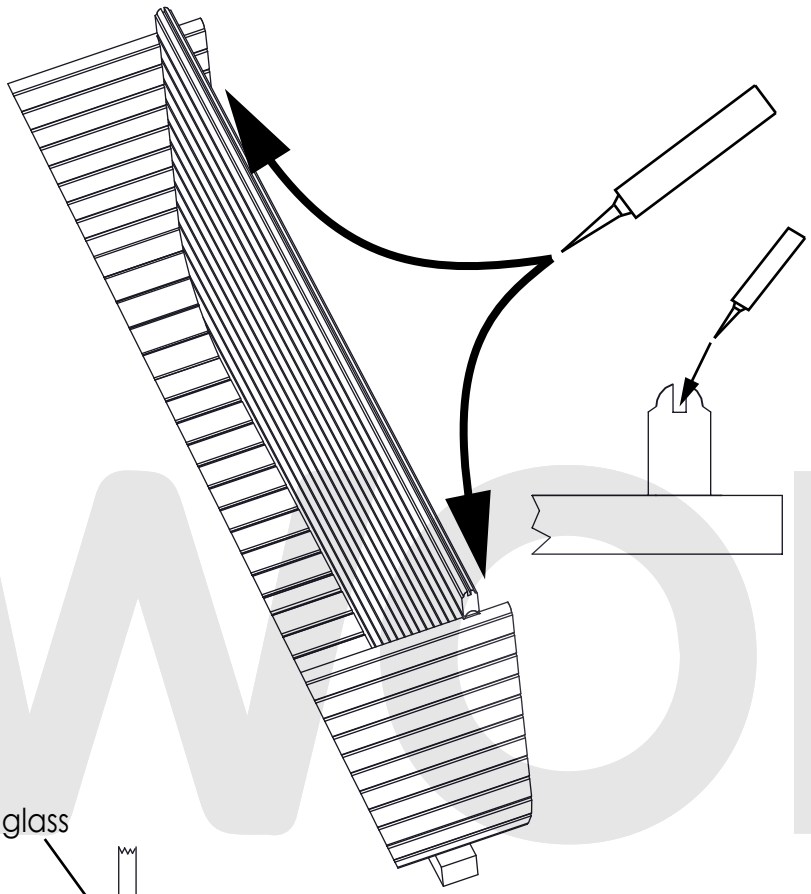

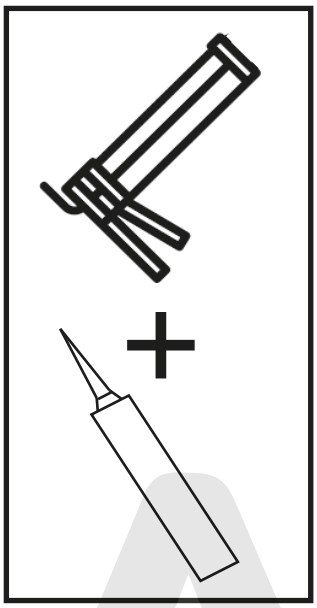

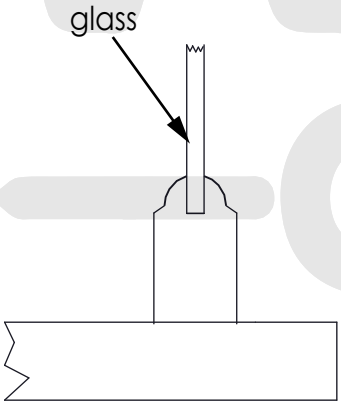

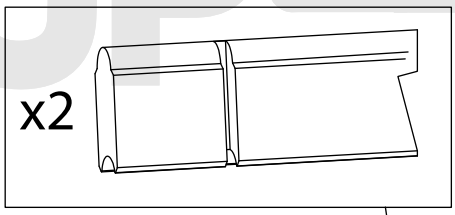

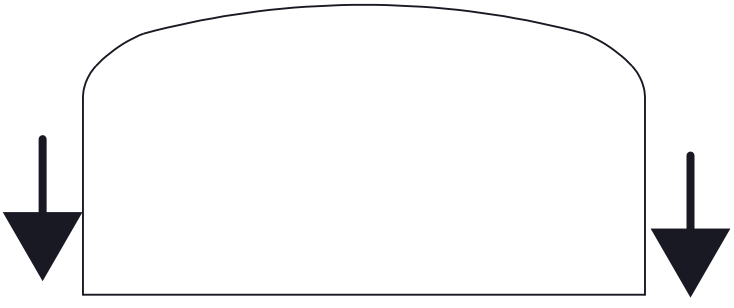

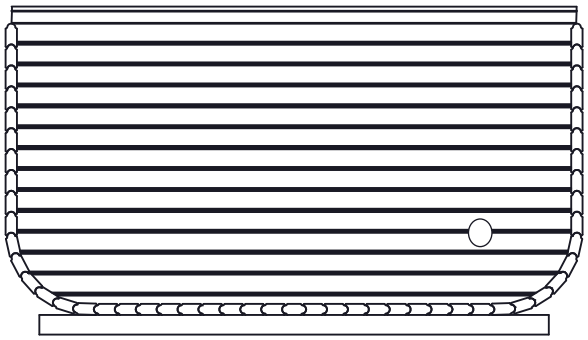

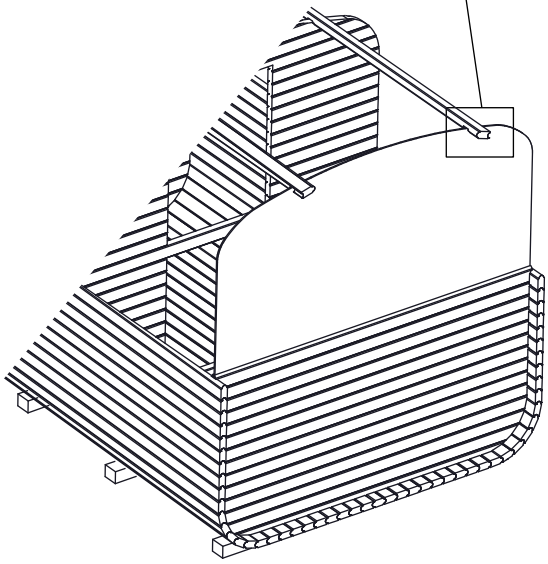

WOLA GROUP

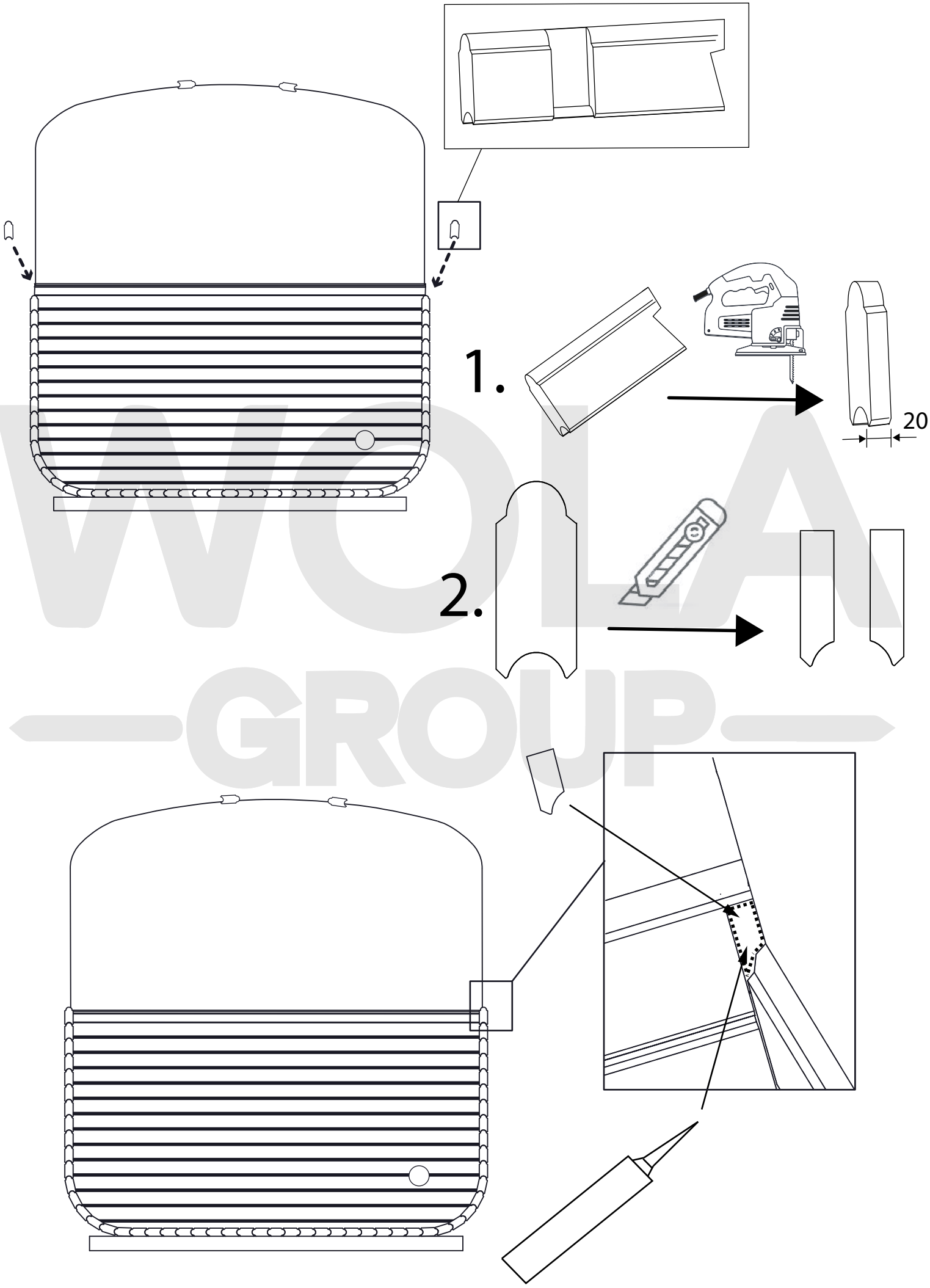
1.
20
2.

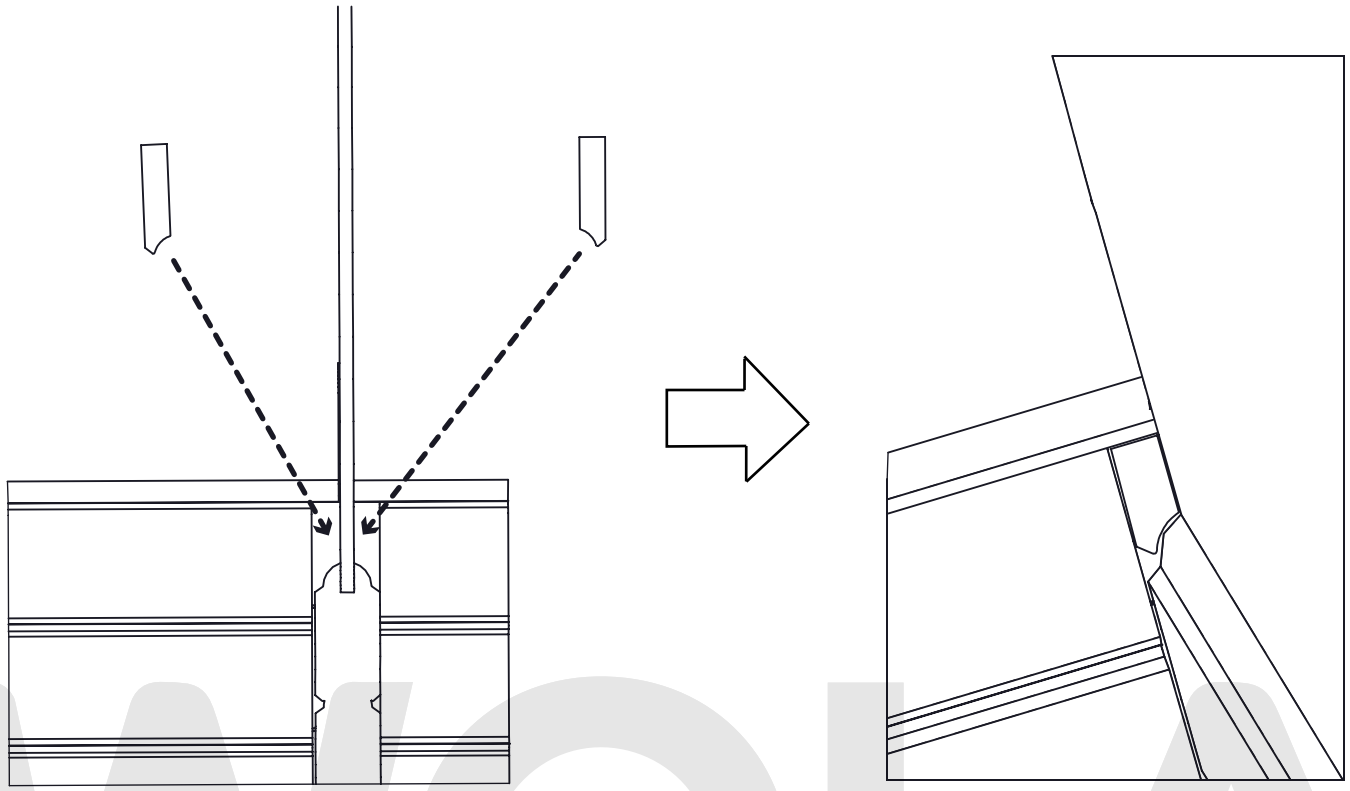

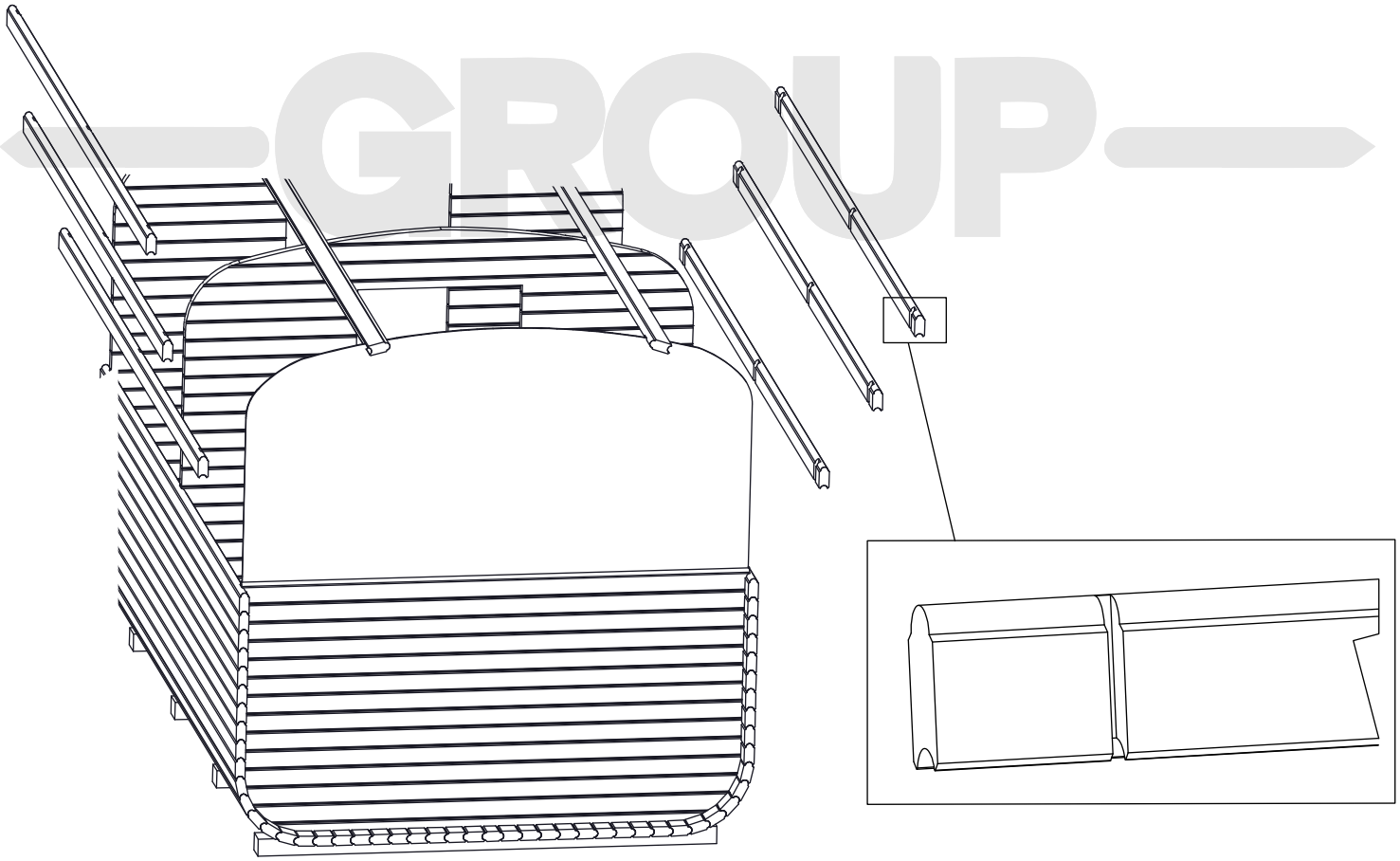

Appendix 3

WOOD-BURNING STOVE AND ELECTRIC STOVE INSTALLING

for set stove only!

COMMON STOVE ASSEMBLING

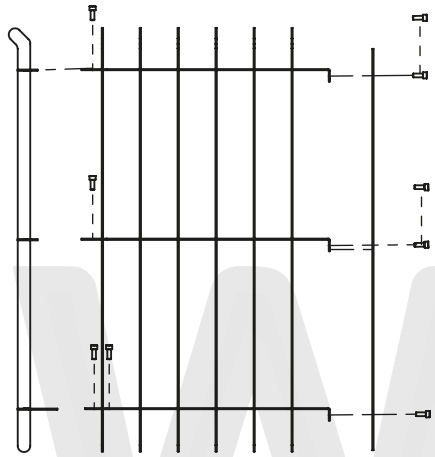

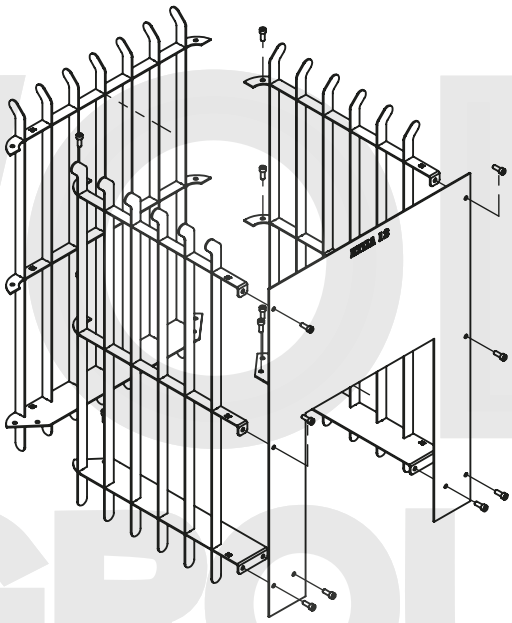

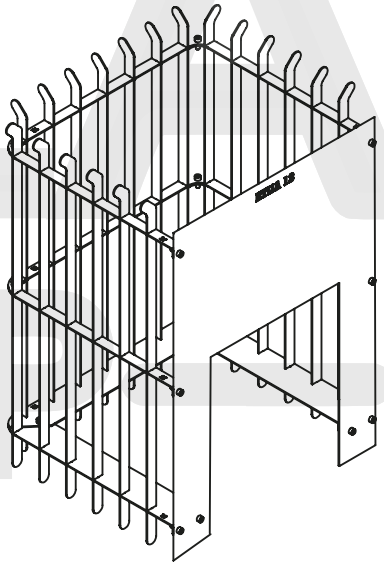



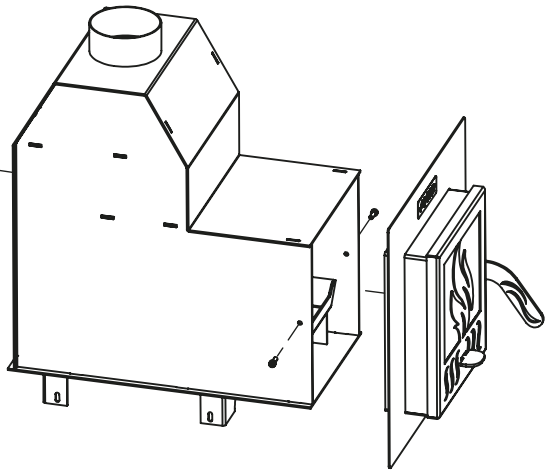

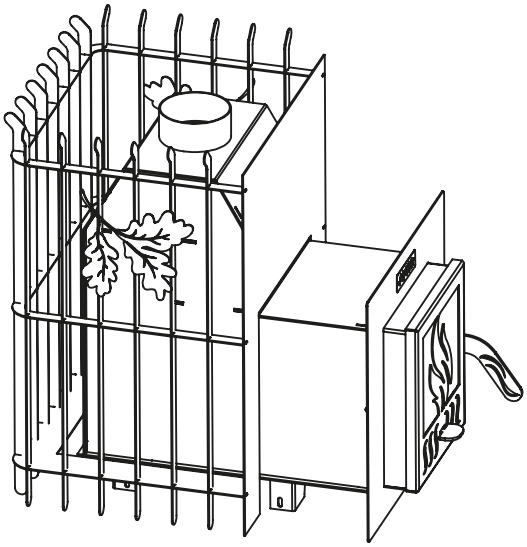

WOLA GROUP

B300 - 2
W400 - 2
4570 - 4

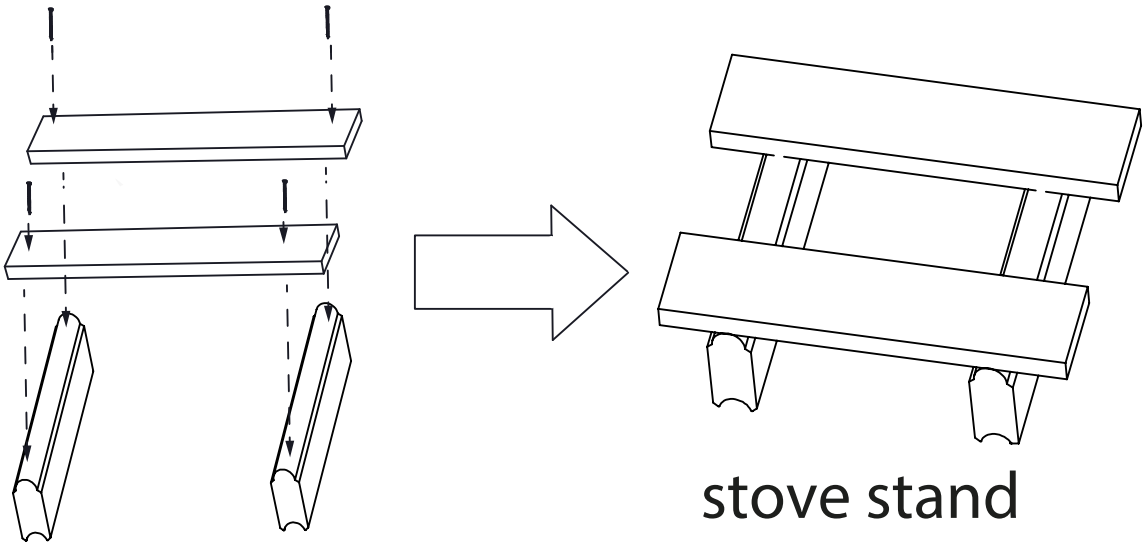

stove stand

ELECTRIC STOVE

G1

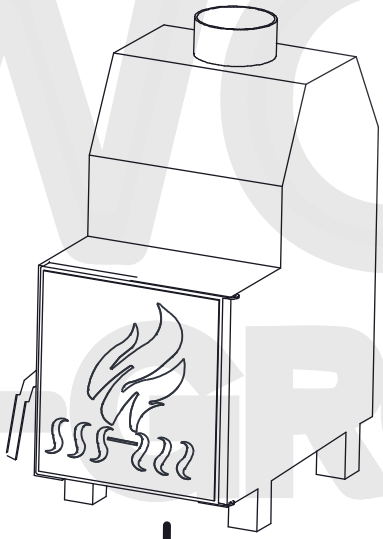

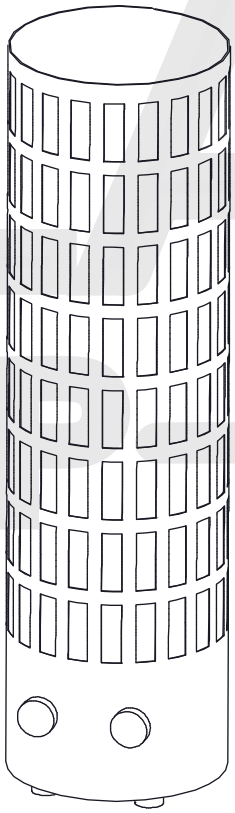

G5

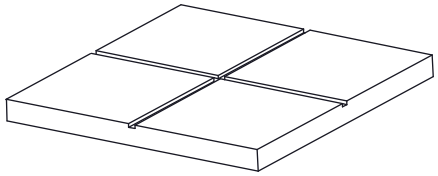

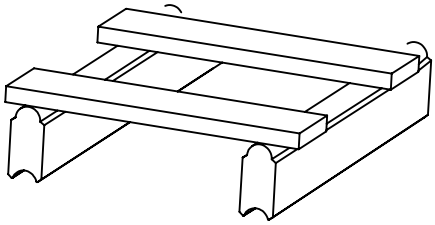

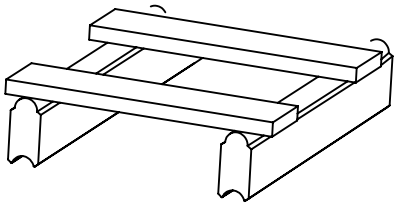

WOLA GROUP

PIPE HOLE

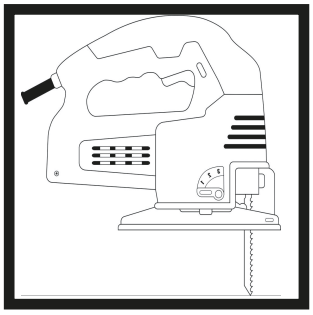

Q2 - 1
4216 - 8

for inner stove door

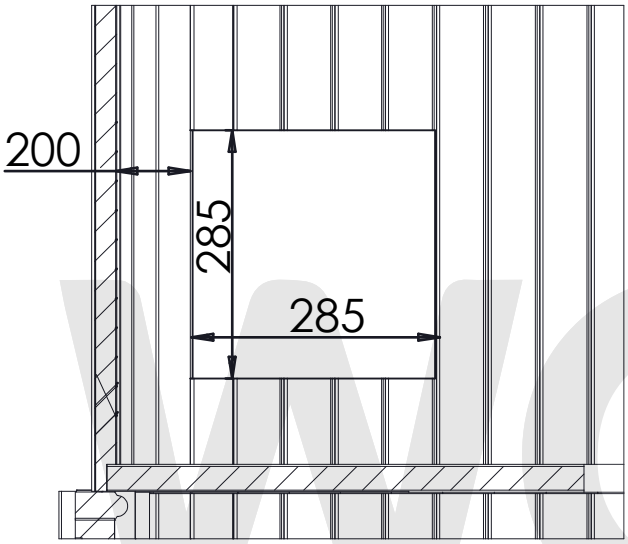

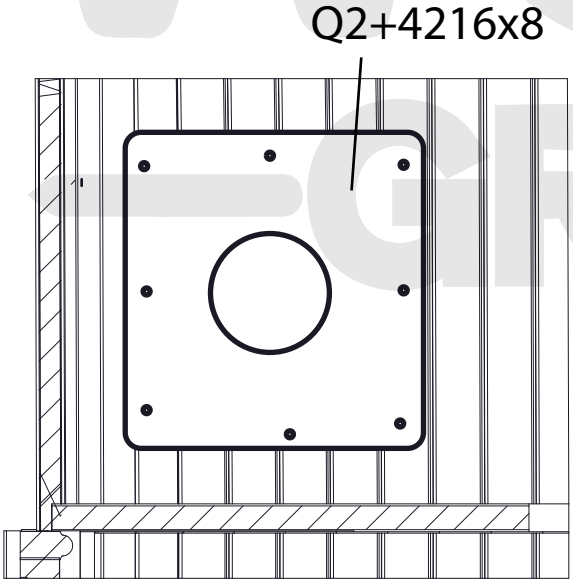

for outer stove door

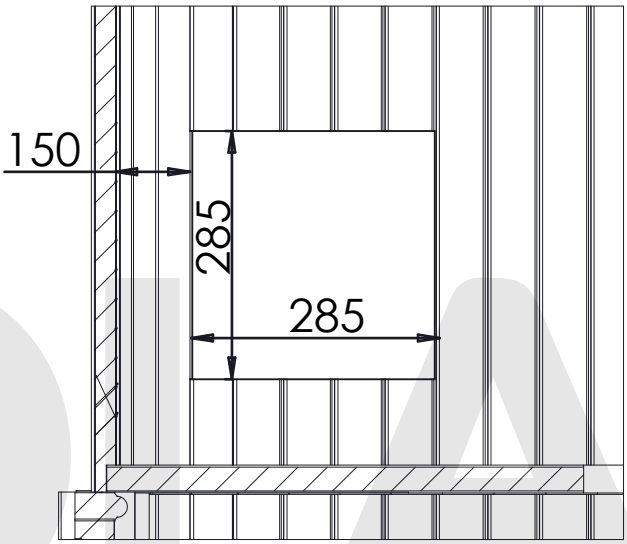

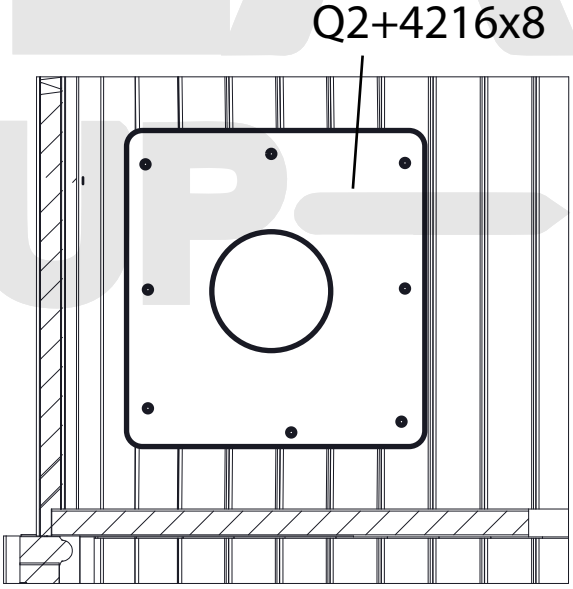

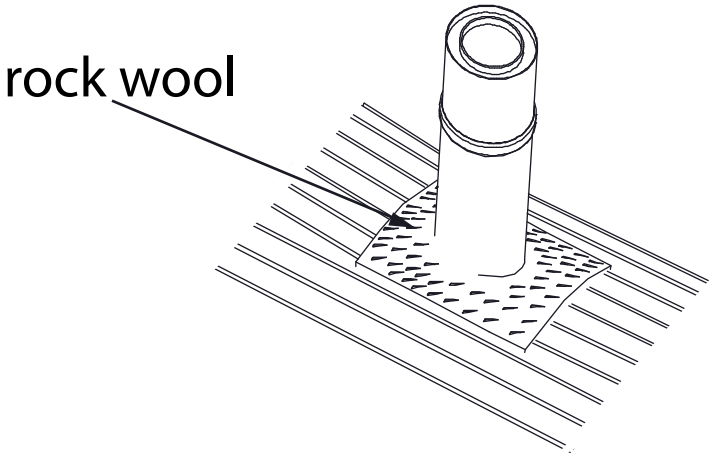

WOLA GROUP

STOVE OPENING
FOR STOVE WITH OUTER DOOR
for set stove only!



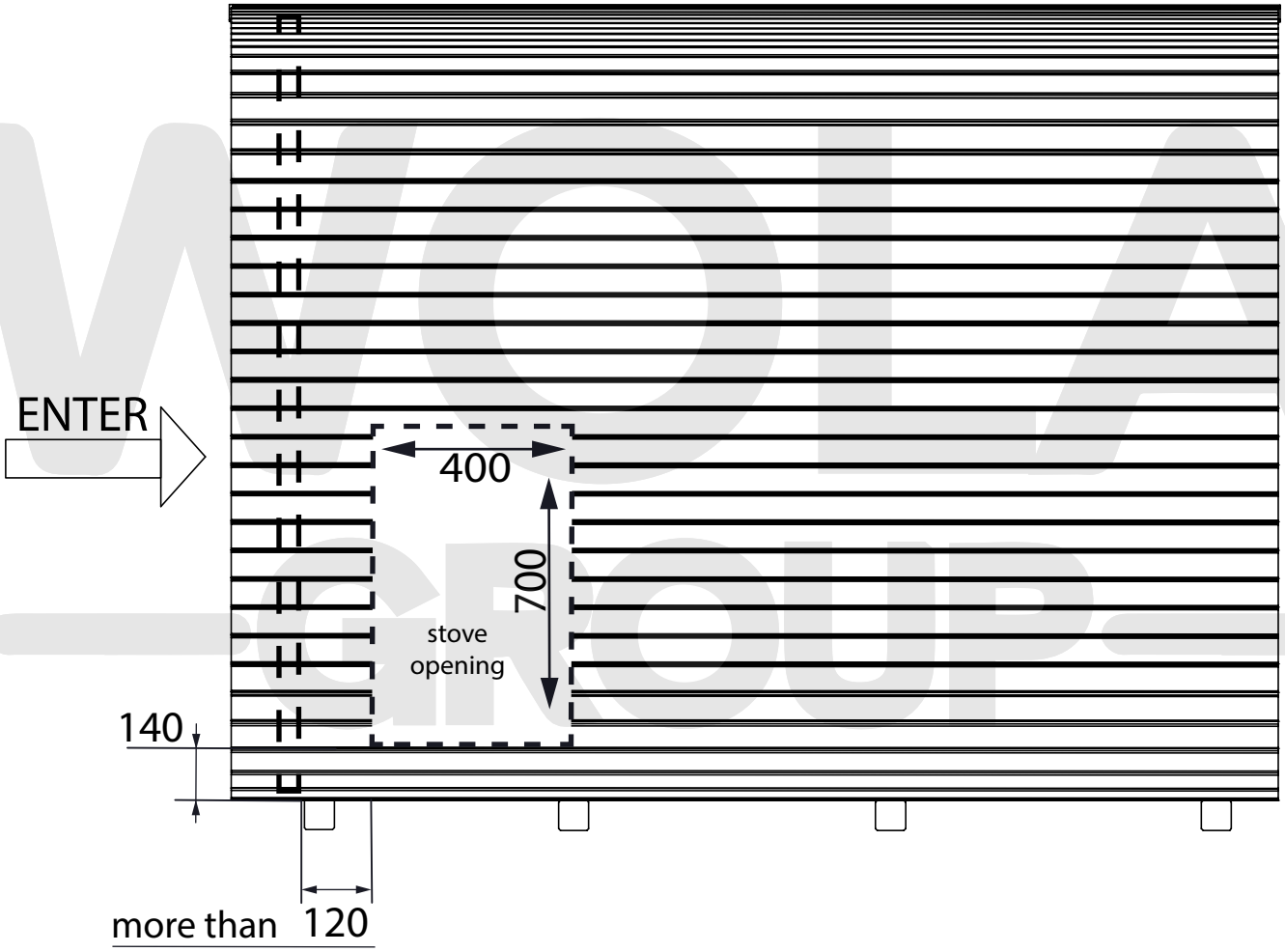

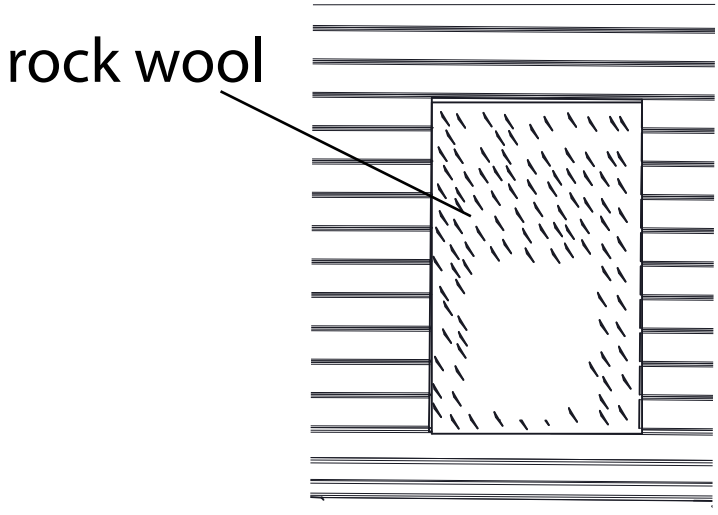

INSIDE VIEW

Q3 - 2
4216 - 20

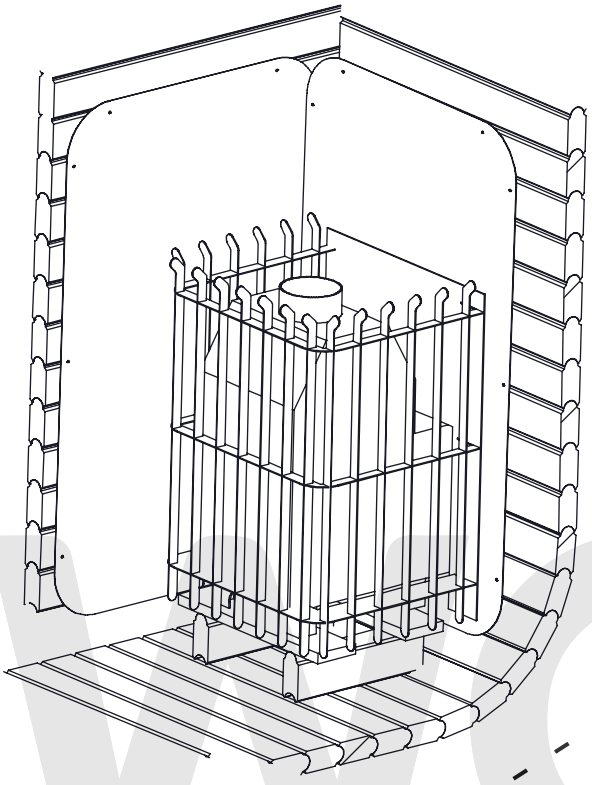

for outer door

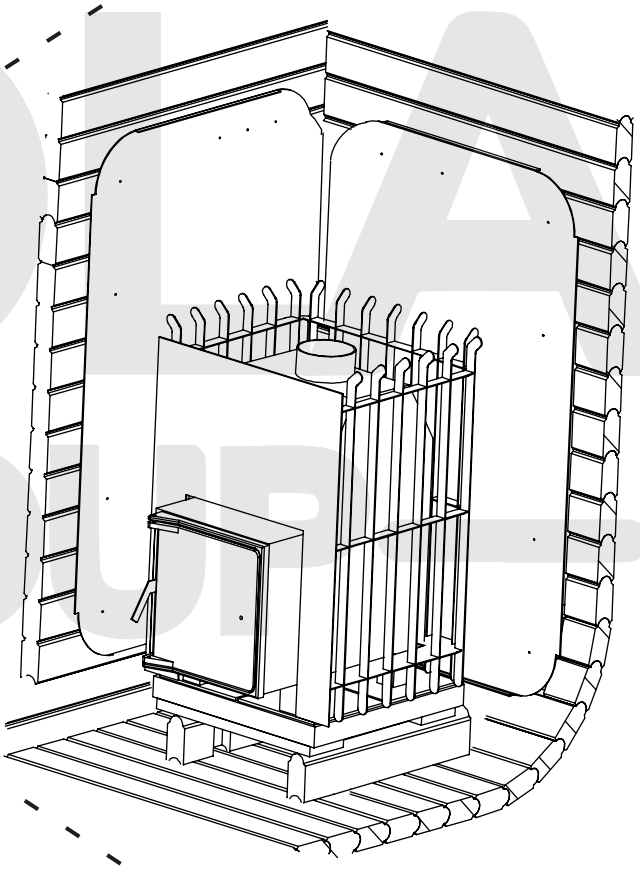

for inner door

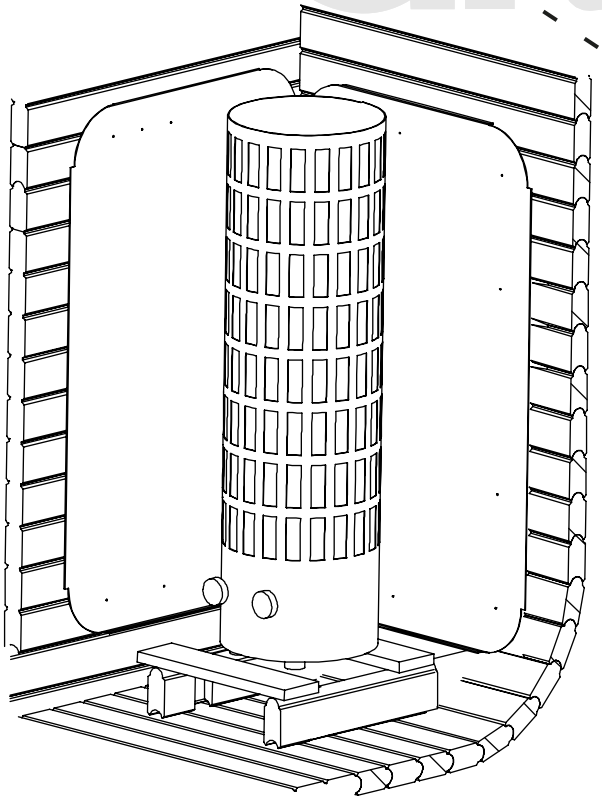

for electric stove

WOLA GROUP

G6 - 1
G7 - 1
G12 - 1

G8 - 1
9325 -12

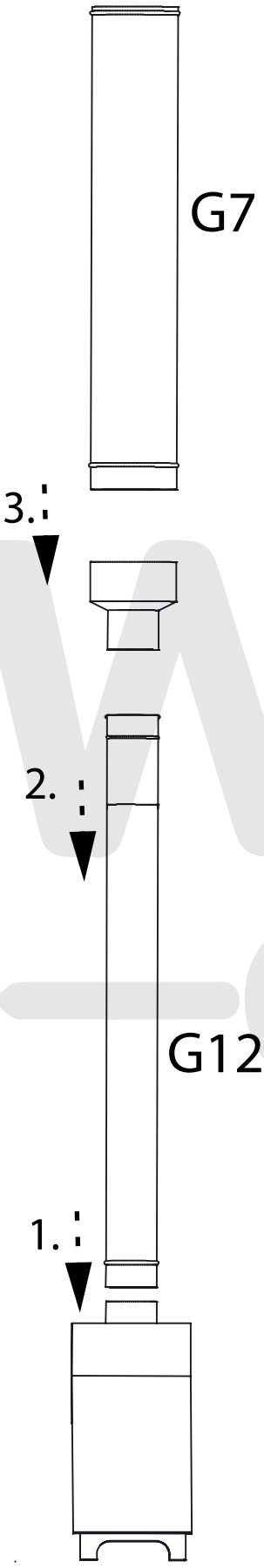

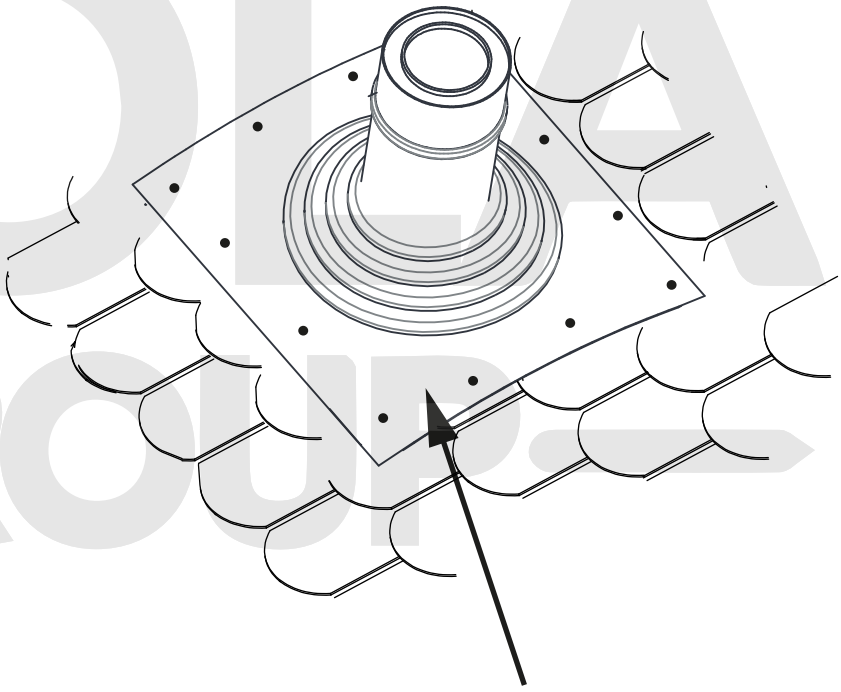

G8 + 12x9325

metal side to down!

WOLA GROUP